Operating Instruction

MONSTERLiner 2.5 / 3.2

Please read and keep this manual, read carefully before attempting to assemble, install, operate or maintain the product described. Protect yourself and others by observing all safety information. Failure to comply with instructions could result in personal injury and/or property damage! Retain instruction for future reference.

www.Maschinen-Klinik.com

Warning!

Attention: Danger of injury by injection!

Airless units develop extremely high spraying pressures.



1

Never put your fingers, hands or any other parts of the body into the spray jet!

Never point the spray gun at yourself, other persons or animals.

Never use the spray gun without safety guard.

Do not treat a spraying injury as a harmless cut. In case of injury to the skin through coating materials or solvents, consult a doctor immediately for quick and expert treatment. Inform the doctor about the coating material or solvent used.

2

The operating instructions state that the following points must always be observed before starting up:

1. **Faulty units must not be used.**
   Secure spray gun using the safety catch on the trigger.
2. **Ensure that the unit is properly earthed.**
3. **Check allowable operating pressure of high-pressure hose and spray gun.**
4. **Check all connections for leaks.**

3

The instructions regarding regular cleaning and maintenance of the unit must be strictly observed.

Before any work is done on the unit or for every break in work the following rules must be observed:

1. **Release the pressure from spray gun and hose.**
2. **Secure the spray gun using the safety catch on the trigger.**
3. **Switch off unit.**

Be safety conscious!

1. Safety regulations for Airless spraying

1.1 Explanation of symbols used

This manual contains information that must be read and understood before using the equipment. When you come to an area that has one of the following symbols, pay particular attention and make certain to heed the safeguard.

	**This symbol indicates a potential hazard that may cause serious injury or loss of life. Important safety information will follow.**
Attention	**This symbol indicates a potential hazard to you or to the equipment. Important information that tells how to prevent damage to the equipment or how to avoid causes of minor injuries will follow.**
	**Danger of skin injection**
	**Danger of fire from solvent and paint fumes**
	**Danger of explosion from solvent, paint fumes and incompatible materials**
	**Danger of injury from inhalation of harmful vapors**
i	**Notes give important information which should be given special attention.**



HAZARD: INJECTION INJURY

Attention: Danger of injury by injection! A high-pressure stream produced by this equipment can pierce the skin and underlying tissues, leading to serious injury and possible amputation.

Do not treat a spraying injury as a harmless cut. In case of injury to the skin through coating materials or solvents, consult a doctor immediately for quick and expert treatment. Inform the doctor about the coating material or solvent used.

PREVENTION:

- **NEVER aim the gun at any part of the body.**
- **NEVER allow any part of the body to touch the fluid stream. DO NOT allow body to touch a leak in the fluid hose.**
- **NEVER put your hand in front of the gun. Gloves will not provide protection against an injection injury.**
- **ALWAYS lock the gun trigger, shut the fluid pump off and release all pressure before servicing, cleaning the tip guard, changing tips, or leaving unattended. Pressure will not be released by turning off the engine. The PRIME/SPRAY valve or pressure bleed valve must be turned to their appropriate positions to relieve system pressure.**
- **ALWAYS keep tip guard in place while spraying. The tip guard provides some protection but is mainly a warning device.**
- **ALWAYS remove the spray tip before flushing or cleaning the system.**
- **NEVER use a spray gun without a working trigger lock and trigger guard in place.**

All accessories must be rated at or above the maximum operating pressure range of the sprayer. This includes spray tips, guns, extensions, and hose.



HAZARD: HIGH PRESSURE HOSE

The paint hose can develop leaks from wear, kinking and abuse. A leak can inject material into the skin. Inspect the hose before each use.

PREVENTION:

- **High-pressure hoses must be checked thoroughly before they are used.**
- **Replace any damaged high-pressure hose immediately.**
- **Never repair defective high-pressure hoses yourself!**
- **Avoid sharp bends and folds: the smallest bending radius is about 20 cm.**
- **Do not drive over the high-pressure hose. Protect against sharp objects and edges.**
- **Never pull on the high-pressure hose to move the device.**
- **Do not twist the high-pressure hose.**
- **Do not put the high-pressure hose into solvents. Use only a wet cloth to wipe down the outside of the hose.**
- **Lay the high-pressure hose in such a way as to ensure that it cannot be tripped over.**



Only use original-high-pressure hoses in order to ensure functionality, safety and durability.



HAZARD: EXPLOSION OR FIRE

Flammable vapors, such as solvent and paint vapors, in work area can ignite or explode.

PREVENTION:

- **Use equipment only in well ventilated area. Keep a good supply of fresh air moving through the area to keep the air within the spray area free from accumulation of flammable vapors. Keep pump assembly in well ventilated area. Do not spray pump assembly.**
- **Do not fill fuel tank while engine is running or hot; shut off engine and allow to cool. Fuel is flammable and can ignite or explode if spilled on a hot surface.**
- **Eliminate all ignition sources, such as pilot lights, cigarettes, portable electric lamps and plastic drop cloths (potential static arc).**
- **Keep work area free of debris, including solvent, rags and gasoline.**
- **Do not plug or unplug power cords, or turn power or light switches on or off when flammable vapors are present.**
- **Ground equipment and conductive objects in work area. Make sure grounding chain is in place and reaches the ground.**
- **Use only grounded hoses.**
- **Hold spray gun firmly to the side of a grounded pail when triggering into pail.**
- **If there is static sparking or if you feel a shock, stop operation immediately.**
- **Know the contents of the paint and solvents being sprayed. Read all Material Safety Data Sheets (MSDS) and container labels provided with the paints and solvents. Follow the paint and solvent manufacturer's safety instructions.**

- Do not use a paint or solvent containing halogenated hydrocarbons. Such as chlorine, bleach, mildewcide, methylene chloride and trichloroethane. They are not compatible with aluminum. Contact the coating supplier about compatibility of material with aluminum.
- Keep a fire extinguisher in work area.



HAZARD: HAZARDOUS VAPORS

Paints, solvents, and other materials can be harmful if inhaled or come in contact with body. Vapors can cause severe nausea, fainting, or poisoning.

PREVENTION:

- Wear respiratory protection when spraying. Read all instructions supplied with the mask to be sure it will provide the necessary protection.
- All local regulations regarding protection against hazardous vapors must be observed.
- Wear protective eyewear.
- Protective clothing, gloves and possibly skin protection cream are necessary for the protection of the skin. Observe the regulations of the manufacturer concerning coating materials, solvents and cleaning agents in preparation, processing and cleaning units.



HAZARD: GENERAL

This product can cause severe injury or property damage.

PREVENTION:

- Follow all appropriate local, state, and national codes governing ventilation, fire prevention, and operation.
- Pulling the trigger causes a recoil force to the hand that is holding the spray gun. The recoil force of the spray gun is particularly powerful when the tip has been removed and a high pressure has been set on the airless pump. When cleaning without a spray tip, set the pressure control knob to the lowest pressure.
- Use only manufacturer authorized parts. User assumes all risks and liabilities when using parts that do not meet the minimum specifications and safety devices of the pump manufacturer.
- ALWAYS follow the material manufacturer's instructions for safe handling of paint and solvents.
- Clean up all material and solvent spills immediately to prevent slip hazard.
- Wear ear protection. This unit can produce noise levels above 85 dB(A).
- Never leave this equipment unattended. Keep away from children or anyone not familiar with the operation of airless equipment.
- Device weighs in excess of 36 kg. Three-person lift is required.
- Do not spray on windy days.
- The device and all related liquids (i.e. hydraulic oil) must be disposed of in an environmentally friendly way.

1.2 Electrostatic charging (formation of sparks or flames)



Electrostatic charging of the unit may occur during spraying due to the flow speed of the coating material. These can cause sparks and flames upon discharge. The unit must therefore always be earthed via the electrical system. The unit must be connected to an appropriately-grounded safety outlet.

An electrostatic charging of spray guns and the high-pressure hose is discharged through the high-pressure hose. For this reason, the electric resistance between the connections of the high-pressure hose must be equal to or lower than 1 MO.

1.3 Gasoline Engine Safety



Always place sprayer outside of structure in fresh air. Keep all solvents away from engine exhaust. Never fill fuel tank with a running or hot engine. Hot surface can ignite spilled fuel. Always attach ground wire from pump to a grounded object. Refer to engine owner's manual for complete safety information.

Gas engines are designed to give safe and dependable service if operated according to instructions. Read and understand the engine manufacturer's Owner's Manual before operating the engine. Failure to do so could result in personal injury or equipment damage.

- To prevent fire hazards and to provide adequate ventilation, keep the engine at least 1 meter (3 feet) away from buildings and other equipment during operation. Do not place flammable objects close to the engine.
- People who are not operating the device must stay away from the area of operation due to a possibility of burns from hot engine components or injury from any equipment the engine may be used to operate.
- Know how to stop the engine quickly, and understand the operation of all controls. Never permit anyone to operate the engine without proper instructions.
- Gasoline is extremely flammable and is explosive under certain conditions.
- Refuel in a well-ventilated area with the engine stopped. Do not smoke or allow flames or sparks in the refueling area or where gasoline is stored.
- Do not overfill the fuel tank. After refueling, make sure the tank cap is closed properly and securely.
- Be careful not to spill fuel when refueling. Fuel vapor or spilled fuel may ignite. If any fuel is spilled, make sure the area is dry before starting the engine.
- Never run the engine in an enclosed or confined area. Exhaust contains poisonous carbon monoxide gas; exposure may cause loss of consciousness and may lead to death.
- The muffler becomes very hot during operation and remains hot for a while after stopping the engine. Be careful not to touch the muffler while it is hot. To avoid severe burns or fire hazards, let the engine cool before transporting it or storing it indoors.
- Never ship/transport sprayer with gasoline in the tank.



DO NOT use this equipment to spray water or acid.

2. Operation

This equipment produces a fluid stream at extremely high pressure. Read and understand the warnings in the Safety Precautions section at the front of this manual before operating this equipment.

2.1 Setup

Perform the following procedure before starting the engine of a gas-powered line striper.

- Ensure that the siphon hose and the return hose are attached and secure.
- Position the spray gun.
- Turn the pressure control knob fully counterclockwise to its lowest pressure setting.
- Make sure the pump ON/OFF switch is in the OFF position

The height of the spray gun affects the width of the spray pattern (i.e., the lower the gun, the smaller the line width). Tip size also affects line width.

Attention

Never operate unit for more than ten seconds without fluid. Operating this unit without fluid will cause unnecessary wear to the packings.

- Check the engine oil level. The gasoline engine oil level is determined by the manufacturer. Refer to the engine manufacturer's service manual (supplied).
- Close the fuel shut-off lever and fill the gas tank with gasoline. Use only high quality, unleaded gasoline.

The gun support bar and the spray gun can be mounted on either side of the sprayer. To move the g un support bar:

- Remove the support bar clamp hex screw and nut.
- Move the gun support bar to the opposite side of the cart.
- Align the support bar clamp with the bracket on the cart.
- Thread the clamp hex screw through the gun support bar clamp and the bracket on the cart. Place the nut on the end of the clamp hex screw and tighten securely.

2.2 Adjusting the trigger tension

Use the following procedure to adjust the spring tension of the trigger lever on the gun holder assembly. The trigger lever pulls and releases the spray gun trigger when operated from the trigger on the cart. The proper tension ensures that the gun will shut off when the gun trigger is released. To ensure proper tension, there should be approximately a 1/32" to 1/16" gap between the trigger lever and the spray gun trigger.

Attention

Always keep the trigger lock on the spray gun in the locked position while adjusting the system.

1. Using a wrench, loosen the bolt on the cable block.
2. Move the cable block in the appropriate direction to create a gap of 0.8 mm to 1.6 mm between the trigger lever and spray gun trigger.
   a. Slide the cable block toward the gun to increase the gap between the trigger lever and spray gun trigger.
   b. Slide the cable block away from the gun to decrease the gap between the trigger lever and spray gun trigger.
3. Tighten the set screw securely.

2.3 Preparing a new sprayer

If this unit is new, it is shipped with test fluid in the fluid section to prevent corrosion during shipment and storage. This fluid must be thoroughly cleaned out of the system with mineral spirits before you begin spraying.

Attention

Always keep the trigger lock on the spray gun in the l locked position while preparing the system.

- Place the siphon tube into a container of mineral spirits.
- Place the return hose into a metal waste container.
- Turn the pressure control knob fully counterclockwise to its lowest pressure setting.
- Move the PRIME/SPRAY valve to the PRIME position.
- Move the engine ON/OFF switch to the ON position.
- Start the engine:

  Open the fuel valve lever (2).

  Move the throttle lever away from the gas tank (3).

  Close the engine choke lever (4).

  Holding the frame with one hand, pull the starter rope (5) rapidly and firmly. Continue to hold the rope as you let it return. Pull and return the rope until the engine starts.

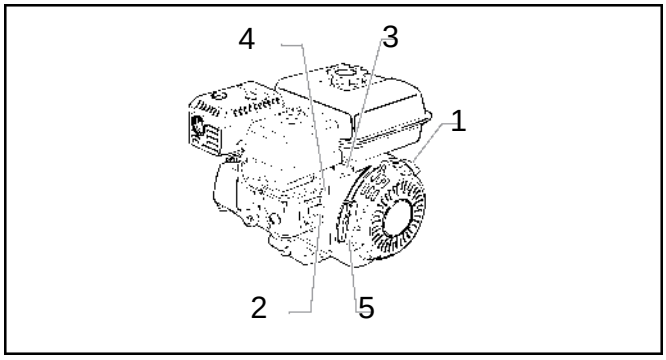

- Turn on the sprayer by moving the pump ON/OFF switch to the ON position.
- Slowly turn the pressure control knob clockwise to increase the pressure until fluid starts to come out of the return hose. Use only enough pressure to keep the fluid coming out.
- Allow the sprayer to run for 15–30 seconds to flush the test fluid out through the return hose and into the waste container.
- Turn the pressure control knob fully counterclockwise to its lowest setting.
- Turn off the sprayer by moving the pump ON/OFF switch to the OFF position.

2.4 Preparing to Paint

Before painting, it is important to make sure that the fluid in the system is compatible with the paint that is going to be used.

Incompatible fluids and paint may cause the valves to become stuck closed, which would require dis-assembly and cleaning of the sprayer's fluid section.

Attention

Always keep the trigger lock on the spray gun in the locked position while preparing the system.

1. Place the siphon tube into a container of the appropriate solvent for the material being sprayed.

If you are spraying a water-based latex, flush with warm, clean water. If you are using any other material, check with the material manufacturer for a compatible solvent.

2. Place the return hose into a metal waste container.
3. Turn the pressure control knob fully counterclockwise to its lowest pressure setting.
4. Move the PRIME/SPRAY valve to the PRIME position.
5. Move the engine ON/OFF switch to the ON position (1).
6. Start the engine:
   a. Open the fuel valve lever (2).
   b. Move the throttle lever away from the gas tank (3).c
   c. Close the engine choke lever (4).
   d. Holding the frame with one hand, pull the starter rope (5) rapidly and firmly. Continue to hold the rope as you let it return. Pull and return the rope until the engine starts.
7. Turn on the sprayer by moving the pump ON/OFF switch to the ON position.
8. Slowly turn the pressure control knob clockwise to increase the pressure until fluid starts to come out of the return hose. U se only enough pressure to keep the fluid coming out.
9. Allow the sprayer to run for 15–30 seconds to flush the old solvent out through the return hose and into the metal waste container.
10. Turn the pressure control knob fully counterclockwise to its lowest setting.
11. Turn off the sprayer by moving the pump ON/OFF switch to the OFF position.

Make sure that the spray gun does not have a tip or tip guard installed.

12. Move the PRIME/SPRAY valve to the SPRAY position.
13. Turn on the sprayer.
14. Turn the pressure control knob slowly clockwise to increase pressure.
15. Increase the pressure by turning the pressure control knob slowly clockwise to its highest setting.
16. Check the entire system for leaks. If leaks occur, turn the sprayer off and follow the “Pressure Relief Procedure” in this manual before tightening any fittings or hoses.
17. Follow the “Pressure Relief Procedure” in this manual before changing from solvent to paint.

Be sure to follow the Pressure Relief Procedure when shutting the unit down for any purpose, including servicing or adjusting any part of the spray system, changing or cleaning spray tips, or preparing for cleanup.

3. Painting

- Place the siphon tube into a container of paint.
- Place the return hose into a metal waste container.
- Turn the pressure control knob fully counterclockwise to its lowest pressure setting.
- Move the PRIME/SPRAY valve to the PRIME position.
- Move the engine ON/OFF switch to the ON position.
- Start the engine:
- Open the fuel valve lever (2).
- Move the throttle lever away from the gas tank (3).
- Close the engine choke lever (4).
- Holding the frame with one hand, pull the starter rope (5) rapidly and firmly. Continue to hold the rope as you let it return. Pull and return the rope until the engine starts.

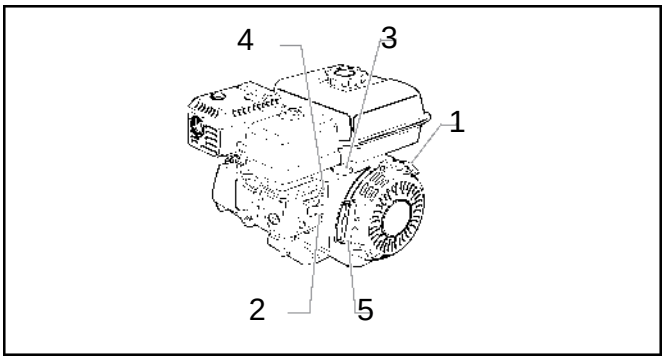

- Turn on the sprayer by moving the pump ON/OFF switch to the ON position.
- Slowly turn the pressure control knob clockwise to increase the pressure until fluid starts to come out of the return hose. Use only enough pressure to keep the fluid coming out.
- Allow the sprayer to run until paint is coming through the return hose into the metal waste container.
- Turn the pressure control knob fully counterclockwise to its lowest setting.
- Turn off the sprayer by moving the pump ON/OFF switch to the OFF position.
- Remove the return hose from the waste container and place it in its operating position above the container of paint.
- Move the PRIME/SPRAY valve to the SPRAY position.
- Turn on the sprayer.
- Turn the pressure control knob slowly clockwise to increase pressure.
- Unlock the gun by turning the gun trigger lock to the unlocked position.
- Trigger the gun into the metal waste container until all air and solvent is flushed from the spray hose and paint is flowing freely from the gun.
- Lock the gun by turning the gun trigger lock to the locked position.
- Turn the pressure control knob fully counterclockwise to its lowest setting.
- Turn off the sprayer.
- Attach tip guard and tip to the gun as instructed by the tip guard or tip manuals.



POSSIBLE INJECTION HAZARD. Do not spray without the tip guard in place. Never trigger the gun unless the tip is in either the spray or the unclog position. Always engage the gun trigger lock before re moving, replacing or cleaning tip.

- Turn on the sprayer.
- Increase the pressure by turning the pressure control knob slowly clockwise. Test the spray pattern and line position on a long piece of roofing felt or cardboard.
  a. Adjust the pressure control knob until the spray from the gun is completely atomized. Try to keep the pressure control knob at the lowest setting that maintains good atomization.



Turning the pressure up higher than needed to atomize the paint will cause premature tip wear and additional overspray.

  b. Check for proper line width and position. If adjustment to the position of the spray gun is required, refer to the “Setup” procedure earlier in this section.

-> Make sure that the spray gun completely shuts off when the gun trigger is released. If adjustment to the trigger tension is required, refer to the “Adjusting the Trigger Tension” procedure.

3.1 Operating the Front Caster

The front caster on the cart is designed to track the sprayer in either a straight line or allow free motion. Standing behind the sprayer, the trigger on the left handle of the cart controls the operation of the front caster.

1. To lock the front caster in the straight-line position, squeeze then release the caster trigger and move the sprayer forward.
2. To allow free motion of the front caster, squeeze and hold the caster trigger.



To lock the front caster in free motion mode, squeeze and hold the caster trigger and then push in the locking button on the side of the trigger. Once the locking button is pushed in, the caster trigger can be released. To release the locking pin, squeeze the caster trigger.

3.2 Pressure Relief Procedure



Be sure to follow the Pressure Relief Procedure when shutting the unit down for any purpose, including servicing or adjusting any part of the spray system, changing or cleaning spray tips, or preparing for cleanup.

- Lock the gun by turning the gun trigger lock to the locked position.
- Turn off the sprayer by moving the pump ON/OFF switch to the OFF position.
- Turn off the engine by moving the engine ON/OFF switch to the OFF position.
- Turn the pressure control knob counterclockwise to its lowest setting.
- Unlock the gun by turning the gun trigger lock to the unlocked position.
- Hold the metal part of the gun firmly to the side of a metal container to ground the gun and avoid a buildup of static electricity.
- Trigger the gun to remove any pressure that may still be in the hose.
- Lock the gun by turning the gun trigger lock to the locked position.
- Move the PRIME/SPRAY valve to the PRIME position.

3.3 Handling the high-pressure hose

The unit is equipped with a high-pressure hose especially suited for piston pumps.



Danger of injury through leaking high-pressure hose. Replace any damaged high-pressure hose immediately.

Never repair defective high-pressure hoses yourself!

The high-pressure hose is to be handled with care. Avoid sharp bends and folds: the smallest bending radius is about 20 cm.

Do not drive over the high-pressure hose. Protect against sharp objects and edges.

Never pull on the high-pressure hose to move the device.

Make sure that the high-pressure hose cannot twist. This can be avoided by using a spray gun with a swivel joint and a hose system.



The risk of damage rises with the age of the high-pressure hose. We recommend replacing high-pressure hoses after 6 years.



Use only original-high-pressure hoses in order to ensure functionality, safety and durability.

4. Cleanup



The sprayer, hose, and gun should be cleaned thoroughly after daily use. Failure to do so permits material to build up, seriously affecting the performance of the unit.



Always spray at minimum pressure with the gun nozzle tip removed when using mineral spirits or any other solvent to clean the sprayer, hose, or gun. Static electricity buildup may result in a fire or explosion in the presence of flammable vapors.

4.1 Special cleanup instructions for use with flammable solvents

- Always flush spray gun preferably outside and at least one hose length from spray pump.
- If collecting flushed solvents in a one-gallon metal container, place it into an empty five-gallon container, then flush solvents.
- Area must be free of flammable vapors.
- Follow all cleanup instructions.

4.2 Cleaning the sprayer

- Follow the “Pressure Relief Procedure”
- Remove the gun tip and tip guard and clean with a brush using the appropriate solvent.
- Place the siphon tube into a container of the appropriate solvent (refer to recommendations of the material manufacturer). An example of the appropriate solvent is water for latex paint.
- Place the return hose into a metal waste container.
- Move the PRIME/SPRAY valve to its PRIME position.
- Move the engine ON/OFF switch to the ON position and start the engine.
- Turn on the sprayer by moving the sprayer ON/OFF switch to the ON position.

- Slowly turn the pressure control knob clockwise to increase the pressure until fluid starts to come out of the return hose.
- Allow the solvent to circulate through the sprayer and flush the paint out of the return hose into the metal waste container.
- Turn the pressure control knob fully counterclockwise to its lowest setting.
- Turn off the sprayer by moving the ON/OFF switch to the OFF position.
- Move the PRIME/SPRAY valve to its SPRAY position.
- Turn on the sprayer.
- Turn the pressure control knob slowly clockwise to increase pressure.

Earth the gun by holding it against the edge of the metal container while flushing. Failure to do so may lead to a static electric discharge, which may cause a fire.

- Trigger the gun into the metal waste container until the paint is flushed out of the hose and solvent is coming out of the gun.
- Continue to trigger the spray gun into the waste container until the solvent coming out of the gun is clean.

For long-term or cold weather storage, pump mineral sprits through the entire system.

- Follow the “Pressure Relief Procedure”
- Store the sprayer in a clean, dry area.

Attention

Do not store the unit under pressure.

Attention

Do not put the high-pressure hose into solvents. Use only a wet cloth to wipe down the outside of the ose.

4.3 Cleaning the Spray Tip

Do not attempt to clean the tip with your finger.

Attention

Do not use a needle or other sharp pointed instrument to clean the tip. The hard tungsten carbide is brittle and can be chipped.

- Flush the gun with solvent immediately after the work is completed.
- Oil the sliding pins to prevent them from seizing up.
- Should the spray tip become clogged, reverse the spray tip with the lever and pull the trigger. Once the obstruction comes out of the spray tip, release the trigger, reverse the spray tip back to the spray pattern setting, and resume spraying.

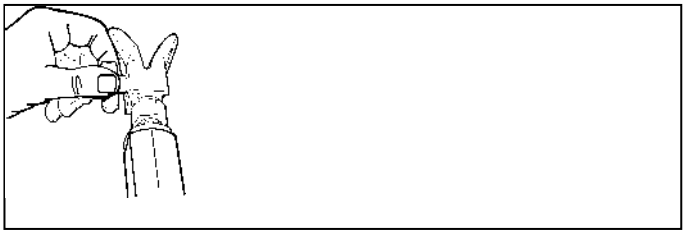

5. Maintenance

Before proceeding, follow the Pressure Relief Procedure outlined previously in this manual. Additionally, follow all other warnings to reduce the risk of an injection injury, injury from moving parts or electric shock.

All Robin-Subaru engine work should be performed by an authorized service center.

5.1 General Repair and Service Notes

Before repairing any part of the sprayer, read the instructions carefully, including all warnings.

Attention

Never pull on a wire to disconnect it. Pulling on a wire could loosen the connector from the wire.

- Test your repair before regular operation of the sprayer to be sure that the problem is corrected. If the sprayer does not operate properly, review the repair procedure to determine if everything was done correctly. Refer to the Troubleshooting section to help identify other possible problems.
- Make certain that the service area is well ventilated in case solvents are used during cleaning. Always wear protective eyewear while servicing. Additional protective equipment may be required depending on the type of cleaning solvent. Always contact the supplier of solvents for recommendations.
- If you have any further questions concerning your airless sprayer, contact an Authorized Service Center.

5.2 Routine Engine Maintenance

Daily

- Check and fill the gas tank.
- After the first 20 hours of operation, drain the oil and refill with clean oil. Check the engine oil level and fill as necessary.

Weekly

- Remove the cover of the air filter and clean the element. Replace the element if necessary. If operating in an unusually dusty environment, check the filter daily and replace if necessary. (Replacement elements can be purchased from your local dealer.)
- After each 50 hours of operation: Change the engine oil

Spark Plug

- Use only a (NKG) BR6HS or Champion RL86C plug.
- Gap the plug 0.020” – 0.030”
- Make sure to use a spark plug wrench when installing and removing the plug.

- Using a 3/8” hex wrench, loosen and remove the outlet valve retainer (7) from the piston rod (1).
- Clean out any debris and examine the outlet valve retainer (7) and seat (6). If the outlet valve seat (6) is damaged, reverse to the unused side or replace the seat.

If the outlet valve seat is reversed or replaced, the outlet valve ball must be replaced.

- Remove, clean, and inspect the outlet cage (3) and outlet valve ball (4). Replace if they are worn or damaged.
- Reassemble the valves by reversing the steps above.

7.2 Repacking the Fluid Section

- Remove the foot valve assembly using the steps in the “Servicing the Valves” procedure, section 8.1.

The outlet valve does not need to be disassembled from the piston rod for this procedure.

- Using 3/8” a hex wrench, loosen and remove the two pump block mounting screws.
- Pull the pump block down approximately 1/2” from the gear box housing.
- Slide the pump block and piston rod forward until the piston rod is out of the T-slot on the slider assembly.
- Slide the piston rod out through the bottom of the pump block
- Loosen and remove the retainer nut and piston guide from the pump block.
- Remove the upper and lower packings from the pump block.
- Clean the pump block.
- Locate the new upper and lower packings and pack the areas between the packing lips with grease. Lubricate the O-rings on the exterior of the packings with grease.
- Inspect the piston rod for wear and replace if necessary.
- Insert the upper packing into the top of the pump block with the raised lip on the packing facing down.
- Insert the piston guide into the retainer nut. Thread the retainer nut into the pump block until it is hand tight.
- Pre-form the lower packing using the lower packing sizing tool (included in the repacking kit).
- Insert the lower packing partially into the bottom of the pump block so that the side that has the O-ring closest to the face of the packing faces up.
- Push the lower packing into position using the lower packing insertion tool (see Fluid Section Assembly parts list for lower packing insertion tool P/N).
- Inspect the piston rod for wear and replace if necessary.

Coat the piston guide tool and the piston rod with grease before inserting them into the pump block.

- Place the piston insertion tool (included in the repacking kit) over the top of the piston rod.
- Insert the piston rod into the bottom of the pump block, through the lower packing, through the upper packing, and out through the retainer nut. Using a rubber mallet, tap the bottom of the piston rod lightly until the piston rod is in position in the pump block.

When repacking the fluid section, make sure the raised lip on the bottom of the lower packing is fully outside the packing around the piston rod after insertion of the piston rod.

- Remove the piston insertion tool from the top of the piston rod.
- Using a wrench, tighten the retainer nut into the pump block. Torque to 300-360 in. lbs.
- Slide the top of the piston rod into the T-slot on the slider assembly.
- Position the pump block underneath the gear box housing and push up until it rests against the gear box housing.

Attention

Make sure the transducer is aligned properly with the hole in the pump block during reassembly. Improper alignment may cause damage to the transducer gasket.

- Thread the pump block mounting screws through the pump block and into the gear box housing. Torque to 400-440 in. lbs.
- Reassemble the foot valve assembly into the pump block.

During reassembly, make sure the O-ring between the pump block and foot valve housing is lubricated with grease and in position.

- Thread the siphon tube into the foot valve housing and tighten securely. Make sure to wrap the threads on the siphon tube with PTFE tape before assembly. Replace the return hose into the clamp on the siphon tube.
- Thread the return hose into the pump block and tighten securely.
- Place the front cover on the gear box housing and secure in position using the four front cover screws.
- Turn on the sprayer by following the procedure in the “Operation” section of this manual and check for leaks.

Repacking kit is available. For best results use all parts supplied in this kit.

8. Remedy in case of faults

Problem	Cause	Solution
A. The unit will not run.	The pressure is set too low.	Turn the pressure control knob clockwise to supply power to the unit and increase the pressure setting.
	Faulty or loose wiring.	Inspect or take to an authorized service center.
	The gas tank is empty.	Fill the gas tank.
B. The unit will not prime.	The PRIME/SPRAY valve is in the SPRAY position.	Rotate the PRIME/SPRAY valve clockwise to the PRIME position.
	Air leak in the siphon tube/siphon set.	Check the siphon tube/siphon set connection and tighten or replace if damaged.
	The pump filter and/or inlet screen is clogged.	Remove the pump filter element and clean. Remove the inlet screen and clean.
	The siphon tube/siphon set is clogged.	Remove the siphon tube/siphon set and clean.
C. The unit will not build or maintain pressure.	The spray tip is worn.	Replace the spray tip following the instructions that came with the spray gun.
	The spray tip is too large.	Replace the spray tip with a tip that has a smaller orifice following the instructions that came with the spray gun.
	The pressure control knob is not set properly.	Turn the pressure control knob clockwise to increase the pressure setting.
	The pump filter, gun filter, or inlet screen is clogged.	Remove the pump filter element and clean. Remove the gun filter and clean. Remove the inlet screen and clean.
	Material flows from the return hose when the PRIME/SPRAY valve is in the SPRAY position.	Clean or replace the PRIME/SPRAY valve.
	Air leak in the siphon tube/siphon set.	Check the siphon tube/siphon set connection and tighten or replace if damaged.
	There is external fluid leak.	Check for external leaks at all connections. Tighten connections, if necessary.
	There is an internal fluid section leak (packings are worn and/or dirty, valve balls are worn).	Clean the valves and service the fluid section following the “Servicing the Fluid Section” procedure in the Maintenance section of this manual.
	Worn valve seats	Reverse or replace the valve seats following the “Servicing the Fluid Section” procedure in the Maintenance section of this manual.
D. Fluid leakage at the upper end of the fluid section.	The upper packings are worn.	Repack the pump following the “Servicing the Fluid Section” procedure in the Maintenance section of this manual.
	The piston rod is worn.	Replace the piston rod following the “Servicing the Fluid Section” procedure in the Maintenance section of this manual.
E. Excessive surge at the spray gun.	Wrong type of airless spray hose.	Replace hose with a minimum of 50’ of 1/4” grounded textile braid airless paint spray hose.
	The spray tip worn or too large.	Replace the spray tip following the instructions that came with the spray gun.
	Excessive pressure.	Rotate the pressure control knob counterclockwise to decrease spray pressure.
F. Poor spray pattern.	The spray tip is too large for the material being used.	Replace the spray tip with a new or smaller spray tip following the instructions that came with the spray gun.
	Incorrect pressure setting.	Rotate the pressure control knob to adjust the pressure for a proper spray pattern.
	Insufficient fluid delivery.	Clean all screens and filters.
	The material being sprayed is too viscous.	Add solvent to the material according to the manufacturer’s recommendations.
G. The unit lacks power.	The pressure adjustment is too low.	Rotate the pressure control knob clockwise to increase the pressure setting.

9. Connection diagram

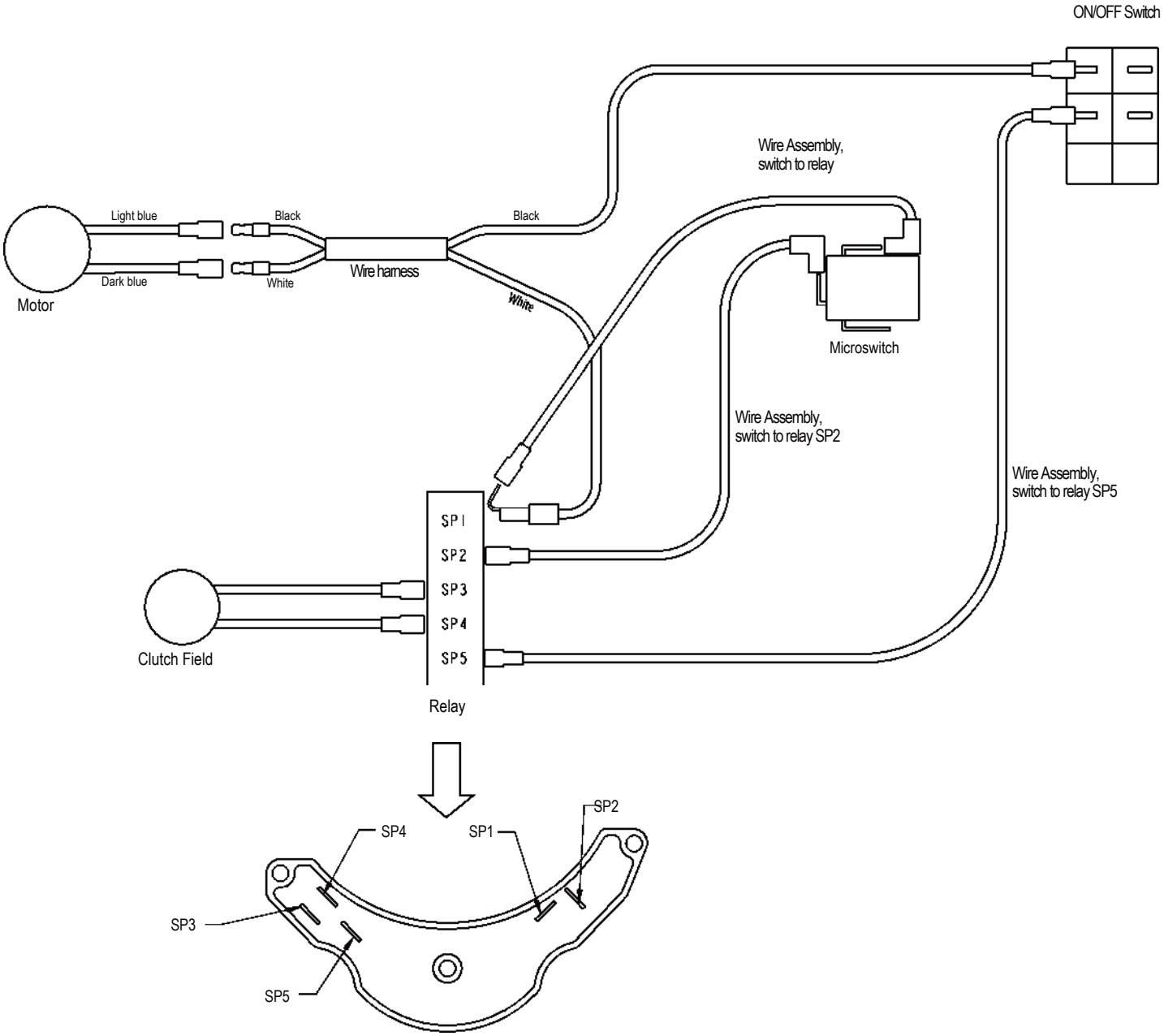

Spare parts diagram

Manifold

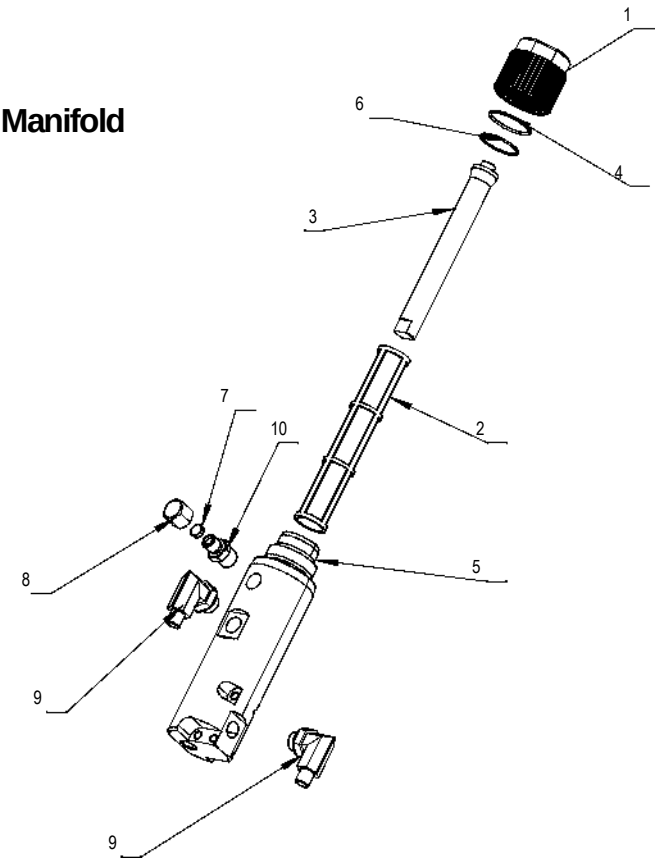

Pos.	Description
1	Cap, manifold
2	Filter, fluid, 60mesh
3	Insert, filter
4	O-ring, cap, manifold
5	Manifold
6	O-ring, manifold
7	Gasket
8	Outlet plug
9	Nipple
10	Outlet Nipple

Prime valve

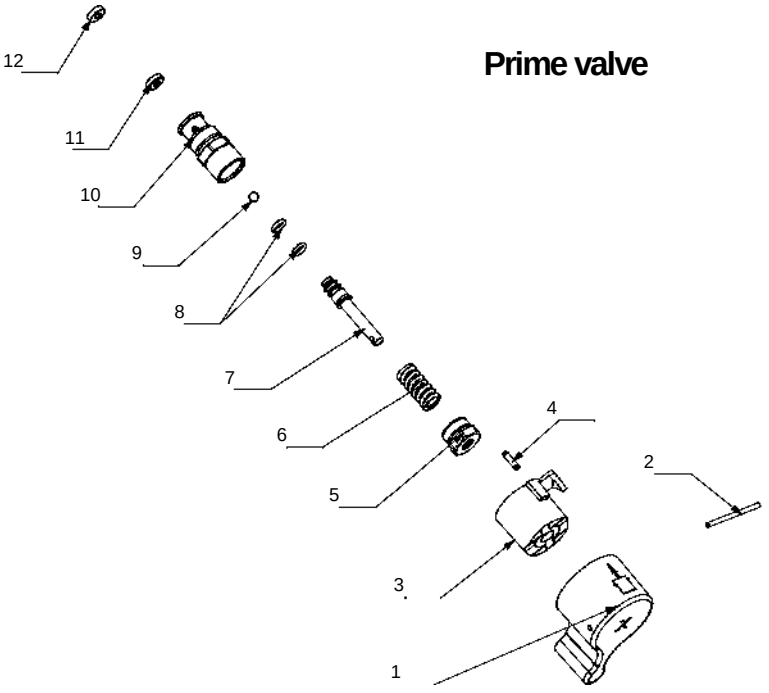

Pos.	Description
1	Handle, valve, drain
2	Pin, groove
3	Base, valve
4	Pin
5	Base, drain valve
6	Spring, drain valve
7	Steam, drain valve
8	O-ring, drain valve
9	Ball, drain valve
10	Valve, drain
11	Seat, drain valve
12	Gasket, drain valve

Fluid pump

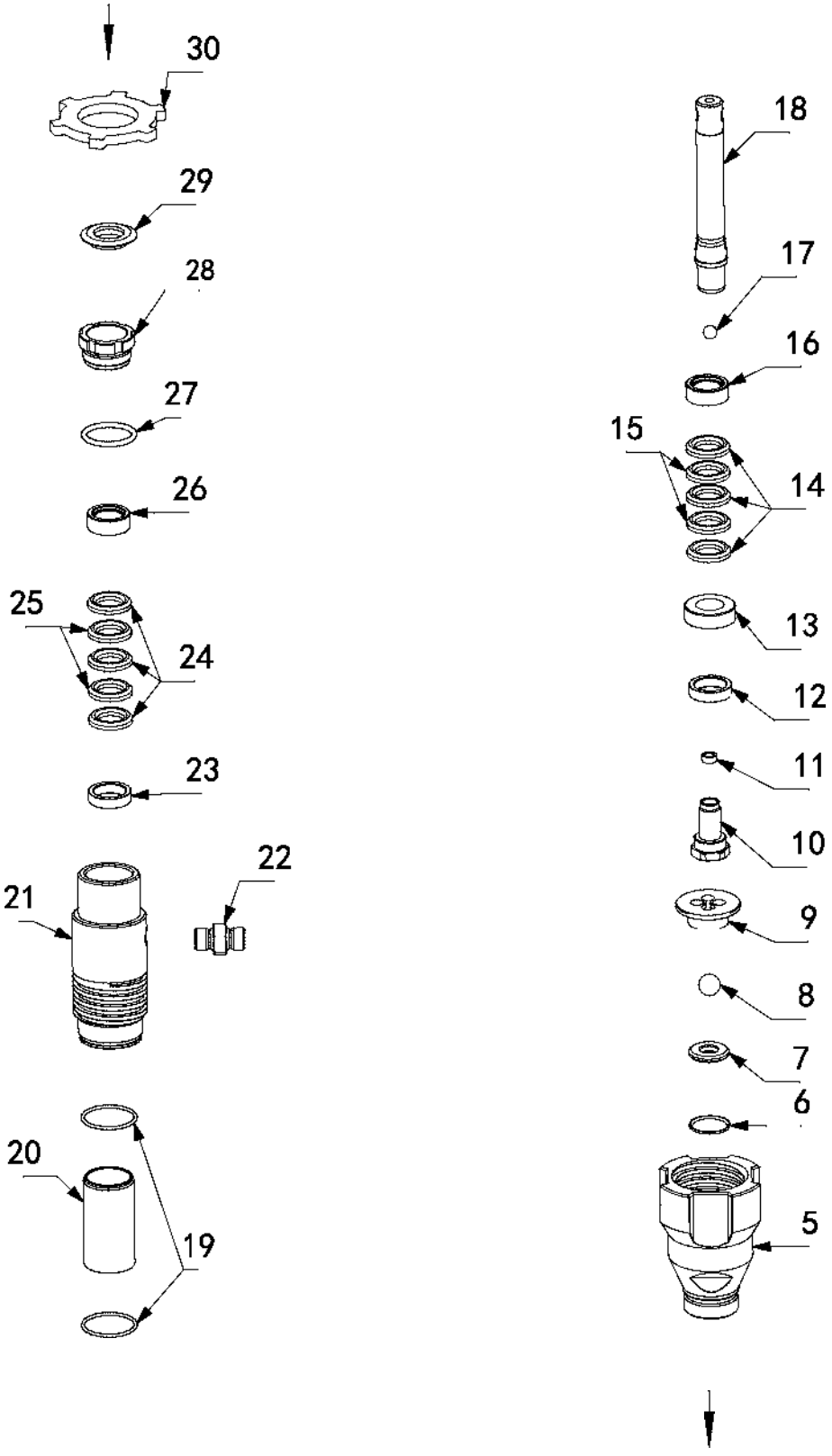

Cart assembly

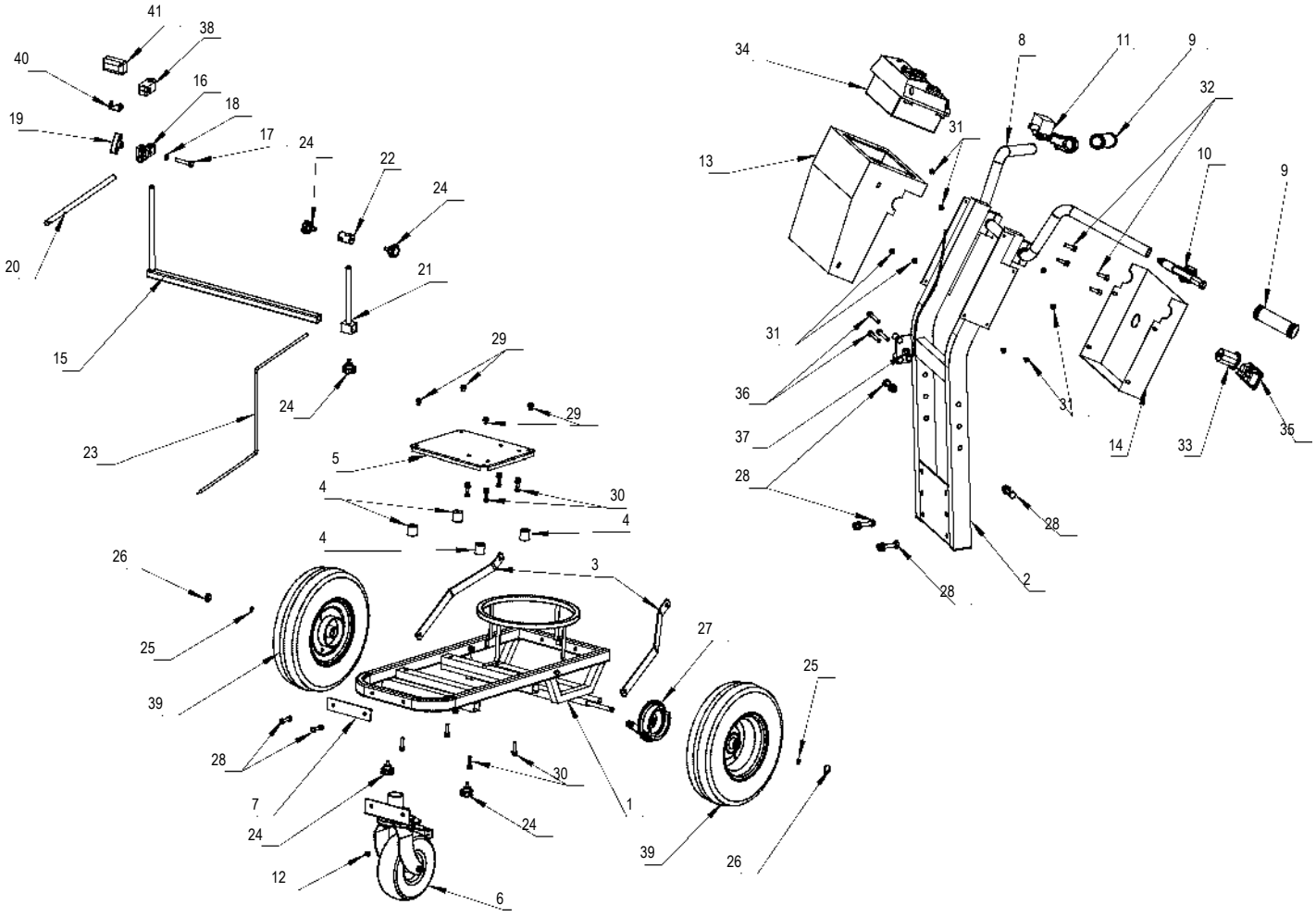

Fluid pump

Pos.	Description
5	Valve intake 2.5 / 3.2
6	O-ring
7	Seat 2.5 / 3.2
8	ball
9	guide
10	Valve Piston 2.5 / 3.2
11	seat
12	Guide 2.5 / 3.2
13	Gland 2.5 / 3.2
14	v-packing 2.5 / 3.2
15	V-packing 2.5 / 3.2
16	Gland 2.5 / 3.2
17	ball
18	Piston rod 2.5 / 3.2
19	O-ring 2.5 / 3.2
20	Sleeve 2.5 / 3.2
21	Cylinder 2.5 / 3.2
22	nipple
23	Gland 2.5 / 3.2
24	v-packing 2.5 / 3.2
25	v-packing 2.5 / 3.2
26	Gland 2.5 / 3.2
27	O-ring 2.5 / 3.2
28	Nut 2.5 / 3.2
29	Button plug 2.5 / 3.2
30	Nut pump 2.5 / 3.2

Cart assembly

Pos.	Description
1	Lower cart
2	Upper cart
3	Reinforcing rib (2)
4	Rubber pad M8 (4)
5	Engine floor
6	Front wheel assembly
7	Front wheel pressure plate
8	Handlebar
9	Grips (2)
10	Left brake handle
11	Upper right pump
12	Brake pads
13	Front cover
14	Back cover
15	Flexible tube
16	U clip (2)
17	Hexagon head bolt M10×55
18	Stop gasket M10
19	T handle
20	Spray gun lever
21	Fixed rod
22	Fixed clamp
23	Ruler
24	Handle M8-L15 (5)
25	Axis card-12 (2)
26	Bearing clamp-12 (2)
27	Brake
28	M8X40 (8)
29	M8X12 (4)
30	M8X35 (8)
31	Screw M4X8 (8)
32	Screw M6-20 black (8)
33	USB
34	Electric control box
35	Switch (2)
36	Screw M6-45 (3)
37	Pressure sensor
38	Clamp
39	Tire (2)
40	Headlight bracket
41	LED light

Front wheel assembly

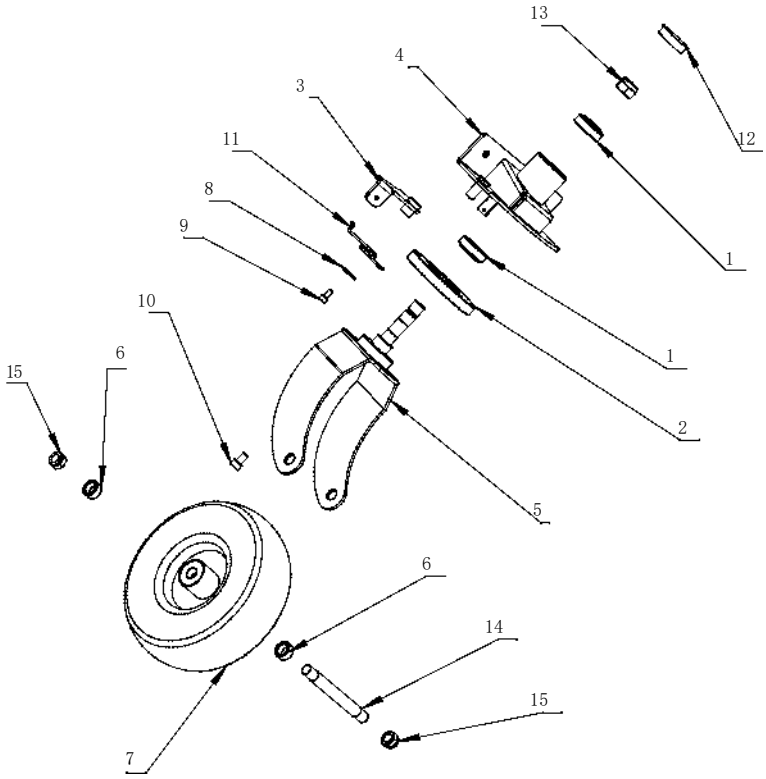

Pos.	Description
1	Bearing 30203 (2)
2	Positioning disk
3	Positioning plate
4	Welding frame
5	Bracket
6	Support bushing (2)
7	Tire
8	Retaining ring
9	Screw M6X12
10	Screw M8X14
11	Torsion spring
12	Hole plug 40
13	Lock Nut M16
14	Fixing bolts
15	Lock Nut M14

Transmission

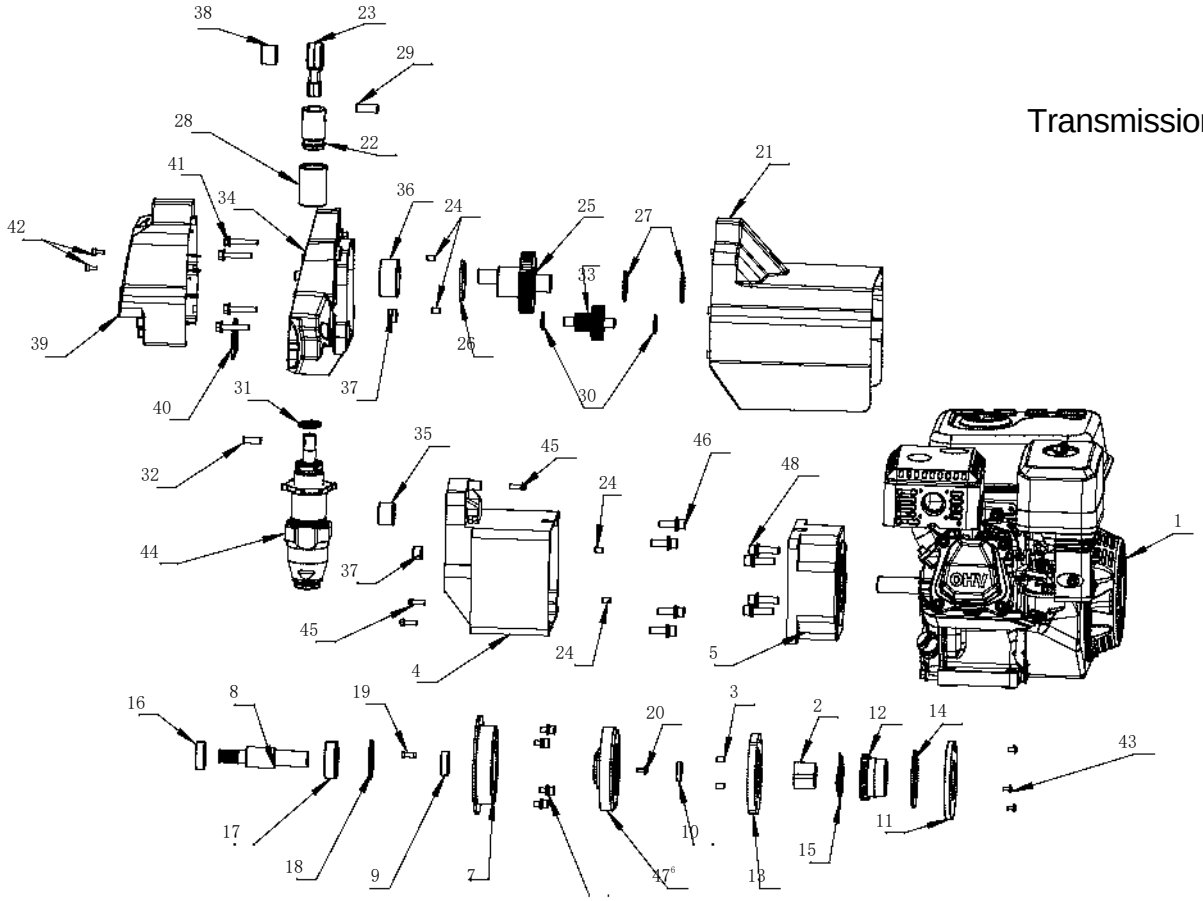

Control box

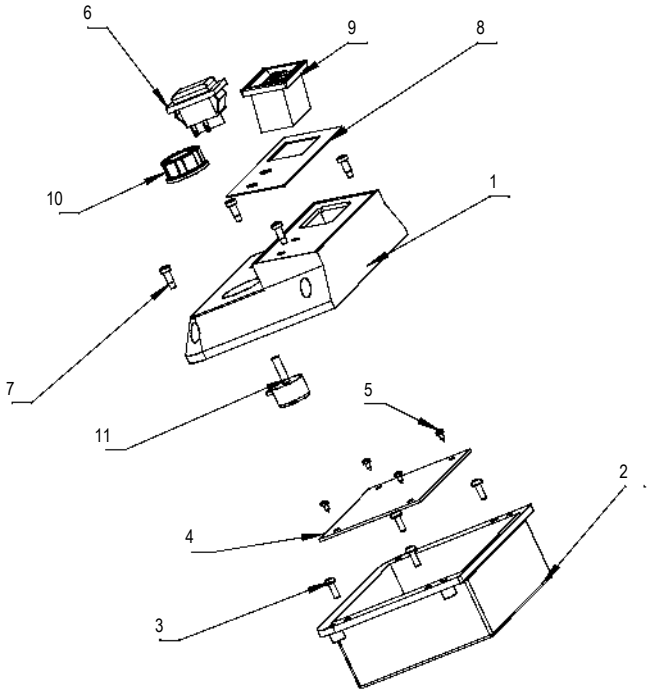

Transmission

Pos.	Description
1	Petrol Engine GX160-Q
2	Shaft taper sleeve
3	Screw M6X12
4	Clutch Housing
5	Engine flange
6	Clutch disc
7	Clutch coil disc
8	Driven shaft
9	Driven shaft spacer
10	Driven shaft gland
11	Shrapnel Platen
12	Clutch spline shaft
13	Active clutch
14	Retaining ring
15	Wave gasket
16	Bearing 6003
17	Bearing 6204
18	Circlip-47
19	Flat key
20	Screw M5X10
21	Back cover
22	Piston, connecting rod
23	Connecting rod
24	Pin, housing
25	Gear, crankshaft
26	Big washer, gear
27	Small washer, gear
28	Sleeve, connecting rod
29	Pin, connecting rod
30	Washer, gear, reducer
31	Clip, piston
32	Pin, straight
33	Shaft, gear
34	drive housing
35	BA1412ZOH
36	BA2414ZOH
37	BA77ZOH
38	BHA1112ZOH
39	Front cover
40	Button, plug

Pos.	Description
a	Screw M6X35
42	Screw M4X10
43	Screw M4X8
44	Pump
45	Screw M5X12
46	Screw M8X25
47	Screw M6×12
48	Screw 5/16

Control box

Pos.	Description
1	Operation panel
2	Operation panel cover
3	Screw M4X12
4	Control board
5	Screw C ST2.9X6.5
6	Switch
7	Screw ST4.2×13
8	Sticker
9	Monitor
10	Knob
11	Potentiometer

ML 2.5 Spray Gun

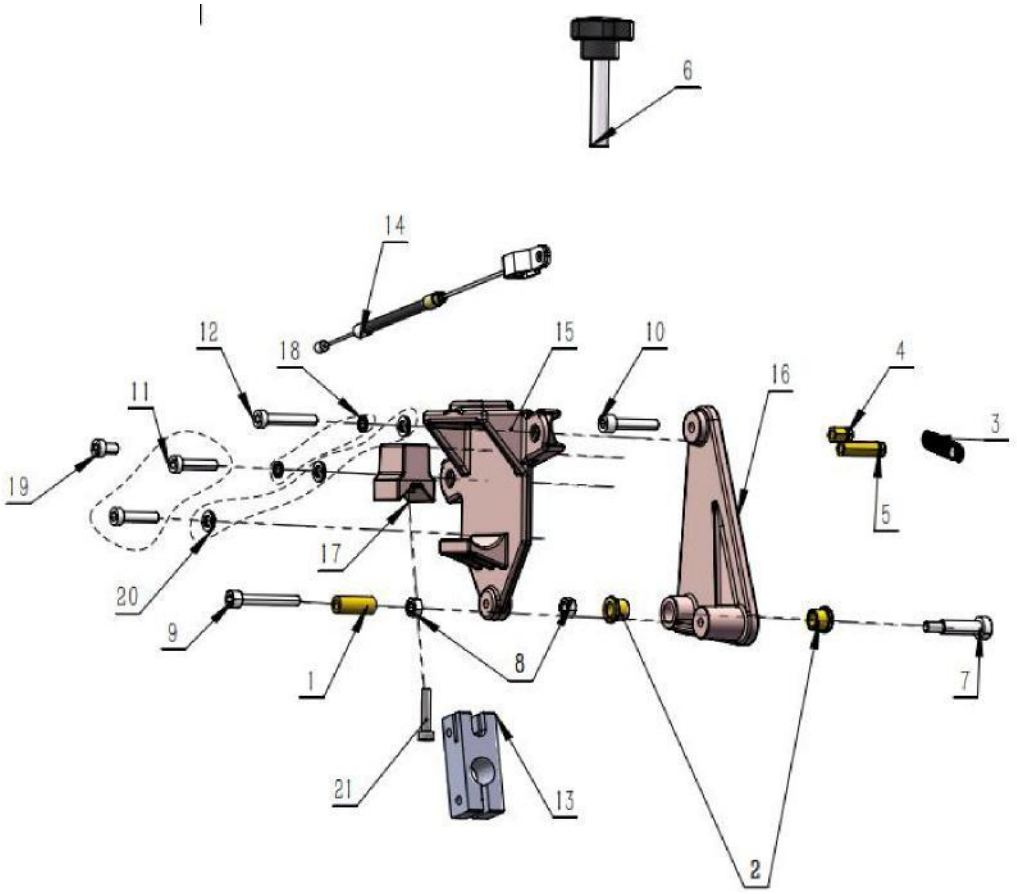

Pos.	Description	QTY
1	Copper sleeve	1
2	Flange bearing	2
3	Spring	1
4	Spring holder	1
5	Sleeve bearing	1
6	Clamping knob	1
7	Shoulder screw	1
8	Jam nut.	2
9	Shoulder screw	1
10	Screw	1
11	Screw	2
12	Screw	1
13	Cable mounting clamp	1
14	Gun cable	1
15	Gun holder	1
16	Lever	1
17	Clamp block	1
18	Gasket	2
19	Screw	1
20	Flat gasket	3
21	Screw	1

3.2 ML Spray gun

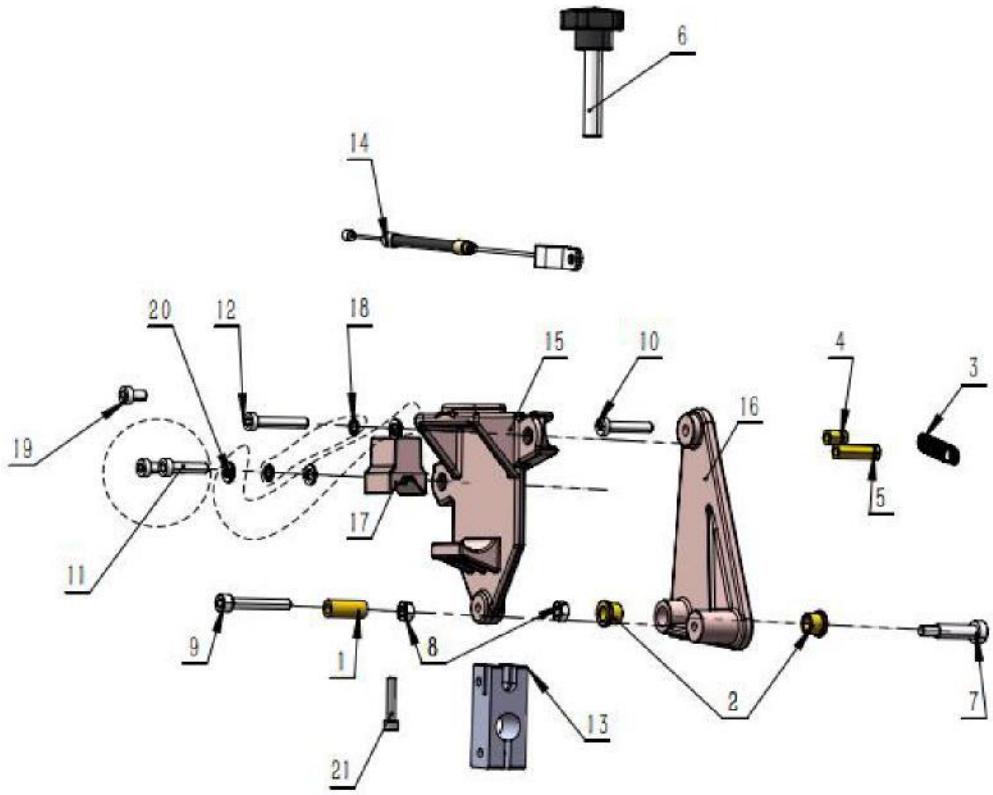

Pos.	Description	QTY
1	Copper sleeve	1
2	Flange bearing	2
3	Spring	1
4	Spring holder	1
5	Sleeve bearing	1
6	Clamping knob	1
7	Shoulder screw	1
8	Jam nut.	2
9	Shoulder screw	1
10	Screw	1
11	Screw	2
12	Screw	1
13	Cable mounting clamp	1
14	Gun cable	1
15	Gun holder	1
16	Lever	1
17	Clamp block	1
18	Gasket	2
19	Screw	1
20	Flat gasket	3
21	Screw	1