MONSTERLiner 5.0

Operating instructions



Warning!

Attention: Risk of injury by injection! Airless devices develop extremely high spray pressures!



Never bring fingers, hands or other body parts into contact with the spray jet! Never point the spray gun at yourself, people or animals. Never use the spray gun without spray jet contact protection. Do not treat an injection injuryas a harmless cut. In the event of a skin injury caused by coating or solvents, consult a doctor immediately for quick, expert treatment. Tell the doctor about the coating material or solvent used.

Beforeeach commissioning, the following points must be observed according to the operating instructions:

- Fail-hard devices must not be used.
- Secure MONSTER paint spray gun with safety lever on trigger guard.
- Ensure grounding.
- Permissible operating pressure of high-pressure hose and spray gun check.
- Check all connecting parts for leaks.

Instructions for regular cleaning and maintenance of the device are strictly adhered to.
Before all work on the device and during the break from work, the following rules heed:

- Relieve pressure on spray gun and high-pressure hose.
- MONSTER spray gun secure with safety lever on trigger guard. device.

Take care of your safety!

1 Safety regulations for airless spraying 4

1.1 Explanation of the symbols used 4
1.2 Vulnerabilities 4
1.3 Gasoline engine operational safety 6
1.4 Refuelling (petrol engine)..... 7

2 Anwendungsübersicht 8

2.1 Applications 8
2.2 Beschichtungsstoffe 8

3 Device description 9

3.1 Airless procedure 9
3.2 Function of the device 9
3.3 Erklärungsbild 10
3.4 Specifications 11

4 Service 12

4.1 Settings 12
4.2 Start of the gasoline engine 14
4.3 Preparation of a new sprayer 14
4.4 Preparation of the color 15
4.5 Procedure for pressure relief. 15
4.6 Operating the impeller..... 16
4.7 Cleaning a clogged nozzle..... 16
4.8 Arbeitsunterbrechung 17
4.9 Handling of the high-pressure hose 17

5 Cleaning 18

5.1 Special cleaning instructions for Use of flammable solvents 18

5.2 Cleaning of the sprayer 18
5.3 Equipment cleaning from the outside..... 19
5.4 Ansaugfilter..... 19
5.5 Cleaning high-pressure filters 19
5.6 Airless spray gun cleaning..... 20

6 Maintenance 20

6.1 General maintenance 20
6.2 Hochdruckschlauch 20
6.3 Easy maintenance of the engine (petrol engine)..... 21
6.4 Setting the trigger voltage 22
6.5 Assistance in the event of malfunctions 23

Warranty 24

1 Safety regulations for airless spraying

1.1 Explanation of the symbols used

This instruction manual contains information that the user must thoroughly work through before using the device. In areas marked with the following symbols, take extra care and observe all safety instructions.



This symbol indicates a potential danger that could lead to death or serious injury. Here you will find important securityinformation.



This icon indicates a potential danger to you or the device. Under this icon, you will find important information on how to avoid damage to the device and risk of injury.



Injektionsgefahr



Fire hazard due to solvents and paint vapours



Risk of explosion due to solvents, paint vapours and unsuitable materials



Risk of injury due to inhalation of harmful fumes



Notes contain important information that should be considered.

1.2 Security risks



Hazard: Injuries from fluids under pressure A high-pressure fluid, such as that produced by this device, can penetrate the skin and penetrate the underlying connective tissue, leading to seriousinjuries and even amputation. Do not treat an injection injury as a harmless cut injury. In the event of a skin injury caused by coating material or solvent, consult a doctor immediately for fast, expert treatment. Tell the doctor about the coating material or solvent used.

Precautions:

- NEVER hold the spray gun on body parts.
- NEVER touch the liquid jet with body parts. NEVER touch a leakin the pressure hose with your body.
- NEVER hold your hand in front of the nozzle of the spray gun. Gloves do not provide safe protection against injuries caused by injected liquids.
- ALWAYS lock the spray gun trigger, turn off the pump and completely release the pressure before performing maintenance, cleaning, see-throughs, nozzle changes or similar work, or leaving the equipment unattended.
Even after switching off the engine, the device is still under pressure. The PRIME/SPRAY valve or pressure relief valve must be in their target positions to relieve the system pressure.
- ALWAYS apply the nozzle guardwhen spraying is carried out. The nozzle guard represents a certain protection, but is primarily intended as a warning device.
- ALWAYS remove the spray nozzle before cleaning or rinsing the system.
- NEVER use a spray gun without a functional trigger latch and without a trigger bracket.
- All accessories must be approved for at least the maximum operating pressure range of the sprayer. These include spray nozzles, spray guns, extensions and hoses.



Danger of high-pressure hose

Due to wear, buckling and improper use
leaks can occur in the
Form a paint hose. Fluid can be injected into the skin through a leak point. Check the hose thoroughly before use!

Precautions:

* Avoid sharp bending or buckling of the high-pressure hose, smallest bending radius about 20 cm.

* Do not overrun high-pressure hose andprotect from sharp objects and edges

* Replace damaged high-pressure hose immediately.

* Never repair defective high-pressure hose yourself!

* Electrostatic charge of spray gun and high pressure hose is discharged via the high pressure hose. Therefore, the electrical resistance between the connections of the high-pressure hose must be equal to or less than one megaohm.

* For reasons of function, safety and service life, use only original MONSTER replacement high-pressure blades.

* Before each use, check all hoses for cuts, leaks, chafing or curved surfaces. Check the clutches for integrity and a tight fit. Replace hoses immediately if any of the above faults are detected. Never repair a paint hose. Replace a defective hose with a grounded high-pressure hose.

* Be sure to lay spray hoses in such a way that the risk of slipping, tripping and general accidentsis minimized.



Danger of explosion and fire



Combustible vapors, such as vapors from solvents and paints, can ignite in the work areas

or explode.

Precautions:

* Use the device only in well-ventilated areas. Pay attention to sufficient fresh air supply throughout the area so that no flammable vapours can accumulate in the air in the spray area. Store the pump assembly in a well-ventilated area. Do not spray the pump assembly. * Do not fill the fuel tank when the engine is running or hot. Switch off the engine and let it cool. The fuel is flammable and can ignite or explode if it comes into contact with a hot surface.
* Useall ignition sources, such as pilot flames, cigarettes, portable electric lamps and plastic tarpaulins (potential electrostatic arc)
* Keep work areas free of contaminants, including solvents, rags and gasoline.
* Do not connect or disconnect the electrical wires or turn the power switch or light switch on or off if flammable fumes have developed.
* Equipment and electrically conductive objects in the work area – make sure the grounding chain is in place and reaches the ground.
* Use only grounded hoses.
* Hold the spray gun firmly to the side of a grounded bucket when splashing into the bucket.
* Ifstatic charges cause sparking or if you feel an electric shock, stop the process immediately.
* You need to know the composition of the paints and solvents you want to spray. Read all Material SafetyData Sheets (MSDS) and container labels of paints and solvents. Follow the safety instructions of the paint and solution manufacturer.
* Do not use paints or solvents containing halogenated hydrocarbons,such as chlorine, bleach, anti-mould, methylene chloride and trichloroethane. They are not compatible with aluminum. Contact the supplier of the coating regarding the compatibility of the material with aluminum.
* Have a fire extinguisher ready in the work area.



Hazardous fumes

Paints, solvents and other materials may occur when or be harmful to health when in contact with the body. The fumes may cause severe nausea, Cause fainting and poisoning.

Precautions:

* Wear respiratory protection when spraying. Work through all the instructions that came with the face mask so that the face mask provides the desired protection.
* The user must be provided with a respirator (BG-rules "Rules for the use of respiratory protective devices" (BGR 190). * Wearwork goggles.
To protect the skin, protective clothing, gloves and possibly skin protection cream are required (BGR 197 "Use of skin protection"). Observe manufacturers' regulations on coating materials, solvents and cleaning agents during preparation, processing and device cleaning.

Danger General



May cause serious personal injury or property damage.

Precautions:

* Comply with all local, state or state regulations for fire safety, operation and ventilation .
* When the trigger is pressed, the spray gun pulls to the side. This force effect of the spray gun is particularly strong when the nozzle has been removed and high pressure has been set in the pump. When cleaning with the nozzle unscrewed, set the pressure regulator knob to the lowest pressure.
* Use only manufacturer-approved parts. When using parts that do not meet the minimum technical requirements, the user bears all risks andliability. This also applies to the safety devices of the pump. * ALWAYS follow the manufacturer's instructions for the safe handling of paints and solvents.
* Wipe up spills and solvents immediately to avoid slipping .
* Wear hearing protection. This device can generate a sound pressure above 85 dB(A).
* Never leave the device unattended. Keep children or others unfamiliar with the operation of the airless sprayer away from the device.
* Do not splash outdoors on windy days. * The device including all liquids (e.g. hydraulic oil) must be disposed of in an environmentally friendly manner.

1.3 Gasoline engine operational safety

- Gasoline engines are built to operate safely and reliably when operated according to instructions. Before operating the engine, the owner's manual of the manufacturer must be read and understood. Failure to do so may result in personal injury or material damage.
- In order to avoid fire hazard and to allow sufficient ventilation, the engine must have at least. Be 1 meter away from buildings and other machinery when it is in operation. Do not store flammable objects near the engine.
- Persons who do not operate the equipment must not enter the operating area, as there is a possibility ofsuffering burns from hot engine parts or injuries from equipment used to operate the engine.
- Gasoline is extremely flammable and explosive under certain conditions.
- Refuel only in a well-ventilatedarea after the engine has been switched off. Do not smoke and do not allow flames or sparks in the area where refueling or gasoline is stored. - Do not overfill the fuel tank. After refueling, make sure that the fuel cap cap is screwed on correctly and securely.
- Be careful not to spill gasoline when refueling. Gasoline fumes or spilled gasoline could ignite. If petrol has been spilled, make sure thearea is dry before starting the engine.
- Never run the engine in an enclosed or confined area. Exhaust gases contain toxic carbon monoxide gases; exposed to them, one runs the risk of losing consciousness and caneven lead to death.
- The exhaust gets hot while the engine is running and remains very hot for a while after the engine is turned off. Be careful not to touch the exhaust while it is still hot. To severe burns or

To avoid fire hazard, allow the engine to cool down before transporting it or storing it in an interior.
- Never ship or transport the sprayer with gasoline in the tank.



DO NOT use the system to spray water or acids.



When loading or unloading, do not stop at the drawbar. The device is very heavy and must be carried by three people.

1.4 Refuelling (petrol engine)



Gasoline is highly flammable and even explosive under certain conditions.

Fuel specifications

Use gasoline with a minimum octane rating of 86 or with a minimum research octane rating of 91. The use of a fuel with a lower octane rating can lead to constant "engine knocking" or strong "knocking" (a metallic knocking noise), which can lead to engine damage if it is too strong.



Change the fuel brand if the "knocking" or "engineknocking" at a steady enginespeed below normal

Stress occurs. If knocking or engine knocking remains, contact an authorized dealer of the engine manufacturer. In case of non-compliance, this is considered misuse and damage caused by misuse is not covered by the manufacturer's guarantee.

Occasionally, there is a slight knocking when the device is heavily loaded. That is no cause for alarm. This only means that the engine is working efficiently.

Unleaded fuel causes less deposits in the engine andspark plugs and extends the life of exhaust system components.

Never use stale or dirty gasoline and/or oil -/petrol mixture. Avoid getting dirt, dust or water into the fuel tank.

Fuel from a mixture of petrol and alcohol

If you choose a fuel from a gasoline-alcohol mixture (gasohol), you must make sure that its octane rating is at least as high as recommended by the engine manufacturer. There are two types of gasoline-alcohol mixture: one contains ethanol and the other contains methanol. Do not use Gasohol containing more than 10% ethanol. Do not use a gasoline-methanol mixture (methyl or wood alcohol) that does not contain additive solvents and corrosion inhibitors for methanol. Never use gasoline that contains more than 5% methanol, evenif it contains additional solvents and corrosion inhibitors.

Damage to the fuel system or



Engine performance problems resulting from the use of fuel containing alcohol are not covered by the warranty.

The engine manufacturer cannot endorse the use of fuels containing methanol, as it has not yet been proven that they are suitable for this purpose.

Try to find out if the gasoline contains alcohol before you get gasoline from an unknown gas station. If this contains alcohol, check the type and percentage of alcohol used. If you notice undesirable operating behaviour when using petrol containing alcohol or which you think contains alcohol, switch to petrol that you know does not contain alcohol.

2 Application overview

2.1 Areas of application

This airless line marking is a powerful precision tool for spraying a wide range of material types for many applications, including parking lots, curbs and sports fields.

Read and pay attention to them
Instruction manual with the appropriate operating and maintenance instructions as well as safety instructions carefully.

2.2 Beschichtungsstoffe

Verarbeitbare Beschichtungsstoffe

Coatings with solvents, two-component coating materials, dispersion and latex paints.

The processing of other coating materials should only be carried out after consultation with the company MONSTER, as the durability and safety of the device can be impaired.



Pay attention to airless quality in the coating materials to be processed.

Viscosity

The device is able to process coating materials with a viscosity of up to 20,000 mPas . If the spraying performance of highly viscous coating materials decreases too much, dilute according to the manufacturer's instructions.

Stir the coating medium well before starting work.

Attention: When stirring with motor-driven agitators, make sure that no air bubbles are stirred in.



Air bubbles interfere with spraying and can eveninterrupt operation.

Coating materials with sharp-edged additives

These particles exert a strong wearing effect on valves and nozzles, but also on the spray gun. The service life of these wear parts is thus significantly impaired.

Filtering

Sufficient filtering is required for trouble-free operation. The system is equipped with a suction filter, a slide-in filter in the fuel guns and a high-pressure filter on the system. A regular inspection of these filters for damageor contamination is strongly recommended.

3 Device description

3.1 Airless procedure

The main areas of application are thick layers of higher-viscosity coating material for large areas and high material consumption.

A piston pump sucks the
coating material and conveys it under pressure to the nozzle. At a pressure of up to max. 220 bar (22.0 MPa) pressed through the nozzle, the coating material atomizes. This high pressure causes microfine atomization of the coating material.

Since no air is used in this system, this process is called airless (airless).

Thistype of spraying offers the advantages of the finest atomization, low-fog operation and smooth, bubble-free surface. In addition to these advantages, the working speed and the great manageability should be mentioned.

3.2 Function of the device

For abetter understanding of the function, briefly the technical structure:

MONSTERLiner 5.0 is a petrol engine
powered high-pressure sprayer.

The gasoline engine (1) drives the piston pump (2), which moves the piston up and down in the material feed pump (3).

Due to the upward movement of the piston, the inlet valve opens automatically. When the piston moves downwards, the exhaust valve opens.

The coating material flows under high pressure through the high-pressure hose to the spray gun. When exiting the nozzle, the coating material atomizes.

The pressure regulating valve (4) regulates the flow rate and the operating pressure of the coating material.

Fig. 2

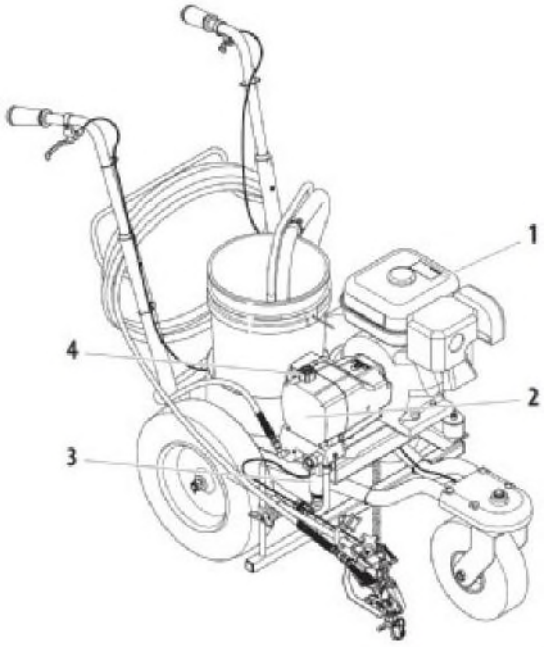

3.3 Erklärungsbild

1. Pistolenauslöser
2. Hochdruckschlauch (15m)
3. Peitschenschlauch (2m)
4. Ventilsatz
5. Connection of high-pressure hose
6. Pistolenhalter
7. Spray gun
8. Radauslöser
9. Rücklaufschlauch
10. Ansaugschlauch
11. Pressure regulator
12. Petrol engine
13. Pumpenbaugruppe

14. Entlastungsventil

    PRIME=

    SPRAY=
15. Assembly impeller
16. Nozzle protection device with airless nozzle

Fig. 3

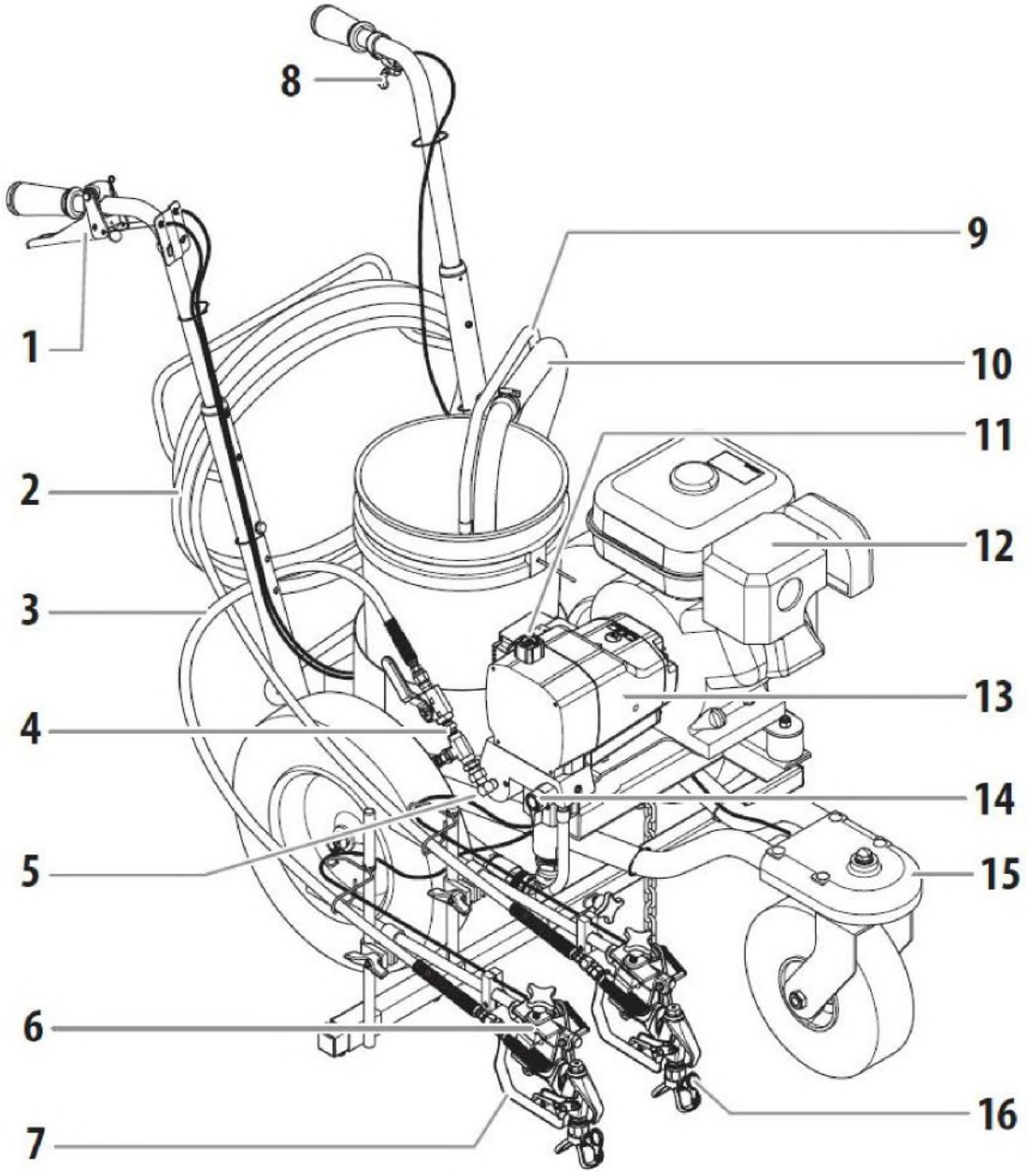

3.4 Technical data

	MONSTER 5.0
Petrol engine, power	
	5.5Hp
Tank capacity	
	2.5 L
operating pressure	
	21,0 Mpa (210 bar)
volume flow	
	5.0 l/min.
Volume flow at 0.6 Mpa (6bar) with water	
	4.5 l/min.
max. max. Temperature of the coating material	
	43°C
Materialschlauchanschluss	
	1/4“ – 18 NPSM
viscosity	
	20.000mPas
Max. Düsengröße	
	0,035“
Tare	
	72 kg
Dimensions	
	135 x 69 x 104 cm
vibration on the spray gun	
	< 2,5 m/s²
sound pressure level	
	78 dB(A)*

Operating temperature

This device works perfectly at its intended room temperature between +10°C and +40°C.

Relative humidity

The device works perfectly in an environment with a relative humidity of 50%, at +40°C. Higher relative humidity is not a problem at lower temperatures.

The purchaser of the equipment must take measures to avoid the damaging effects of occasional condensation.

Height

This device works perfectly at an altitude of up to 2100m above sea level

The Honda Service Centre can add height equipmentshould a high-altitude operation be required.

Transport and storage

This device is used for transport or transport. Storage temperatures from -25°C to + 55°C, briefly up to +70°C, stand or are protected against it.

It has been packaged to withstand damage from the effects of normal moisture, shocks and shocks.

* Measuring location: distance 1 m to the side of the device and 1.60 m above the ground, 12 Mpa (120 bar) operating pressure, silent floor.

4 Operation

This component produces a flow of liquid at extremely high pressure. Read and understand the notes in the section on Safety precautions at the beginning of this Manual before using this device.

4.1 Settings

1. Make sure that the siphon hose and the return hose are connected and fit securely.

2. Make sure that the ON/OFF switch (1) of the pump is set to OFF.

3. Turn the pressure slider knob (Fig. 4, item 2) all the way to the left counterclockwise to the lowest pressure setting.

Fig. 4

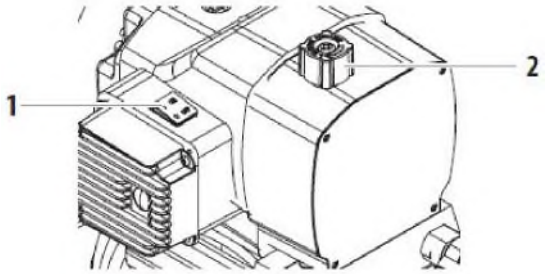

4. Fill the color grade lubrication box with about a teaspoonful of piston seal lubricant (piston lubricant).

Never let the system run without liquid for more than ten seconds. The operation of this device without liquid leads to unnecessary Wear on the packs.

Achtung

5. Check the engine oil level. The oil level in the petrol engine is specified by the manufacturer. See theengine manufacturer's maintenance manual (attached).

6. Close the fuel lever and fill the fuel tank with gasoline. Use only unleaded, high-quality gasoline.

Positioning of the spray guns

Assembly of a spray gun

1. Using awrench, screw the 50' airless spray hose to the sprayer at the material outlet. Tighten it well.

2. Connect an airless spray gun to the spray hose using two wrenches (one for the spray gun and one for the hose) and tightenthem tightly.

Assembly of two spray guns

1. Using a wrench, screw the ball valve (1) (optional) with the connected hose [2]) at the material outlet (3) onto the sprayer. Tighten it well.

2. Usinga wrench, screw the 6' airless spray hose (4) to the upper outlet on the ball valve. Tighten it well.

Fig. 5

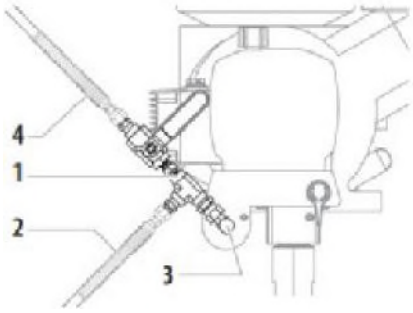

3. Connect the airless spray gun to each spray hose using two wrenches (one for the spray gun and one for the hose) and tighten them tightly.

If you want to use both spray guns, you must make sure that the ball valve (optional) is in the open position (handle in orientation to the short hose).
Fig. 6

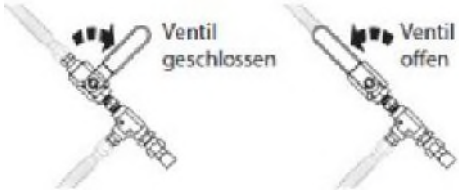

1. Release the support rod knob (Fig. 7, item 1) and slide the pistol supportrod (2) into the desired horizontal position. The gun should be placed wide enoughso that the wheel does not pass through the spray pattern.

Fig. 7

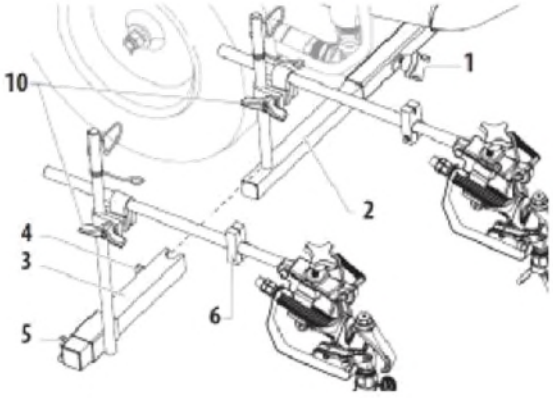

2. Installation of the 2nd spray gun

a. Slide the support rod assembly of the 2nd pistol (3) over the end of the support rod of the 1st pistol (2). Secure them by tightening the support rod knob of the 2nd pistol (4).

b. Release the button of the pistol rod of the 2nd pistol (5) and push the rod into the desired horizontal position.

c. Run the 2nd gun cable through the block and cable guides below the frame and back towards the cart handle. Use cable ties to attach the cable to the frame.

Achtung

Make sure that the cable does not touch the tires or interfere with the mobility of the car in any way .

d. Insert the gun cable assembly (Fig. 8 , Pos 7) into the bore of the control guide (8) until it clicks into place.

e. Attach the hook-shaped end of the cable in the hole in the lever plate (9).

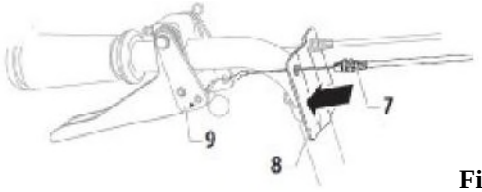

Fig. 8

To verify that the cable is correct has been mounted, see section "Adjustment of tightening tension".

3. Release the riser tube clamp(s) of the gun (Fig. 7, Pos 10) and slide the spray gun(s) into the desired vertical position(s). A distance of 6" from the tip to the spray surface is a good starting point.

The gun support rod and the spray gun(s) can be mounted on both sides of the spraying system. See figure "Positions"

the spray gun" at the end of this manual.

The height of the spray gun affects the width of the spray gun(i.e. the deeper the gun, the thinner the line width). Also the nozzle size affects the line width.

4.2 Starting the petrol engine

Follow the instructions below when prompted in this engine starting guide.

1. Open the lever for the fuel valve (Fig. 10, pos. 2).

2. Adjust the throttle valve (3) to center.

3. Move the choke lever (4) to the closed position when the engine is cold or to the open position when the engine is warm,

4. Turn the motor switch (1) to the ON position.

5. Pull jerkily on the starter cord (5) until the engine starts.

Fig. 10

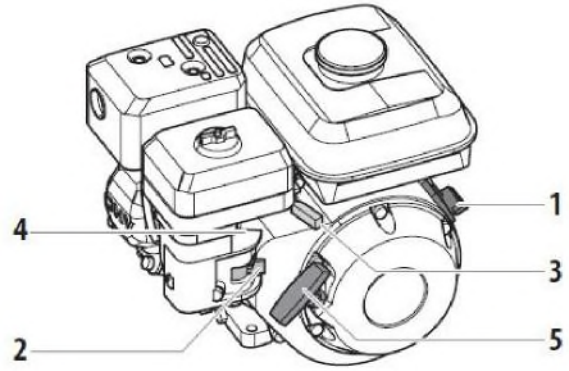

If the choke lever (4) has been moved to the closed position to start the engine, it must be opened again as soon as the engine is running.

4.3 Preparation of a new sprayer

If the sprayer is new, it is delivered with test liquid in the liquidcontainer to prevent corrosion during delivery and

Avoid storage. This test liquid
must be thoroughly removed from the system with alcohol
are removed before spraying

Achtung

Always keep the spray gun release locked while the system is being prepared for commissioning. See

Usermanual spray gun regarding trigger lock.

The spray gun must not yet be equipped with a nozzle guard or nozzle.

1. Suction hose (Fig. 11, item 1) and return hose (2) into a container with spirit.

2. Turn pressure regulator (3) to minimum pressure.

3. Open relief valve (4), valve position PRIME (traffic)

Fig. 11

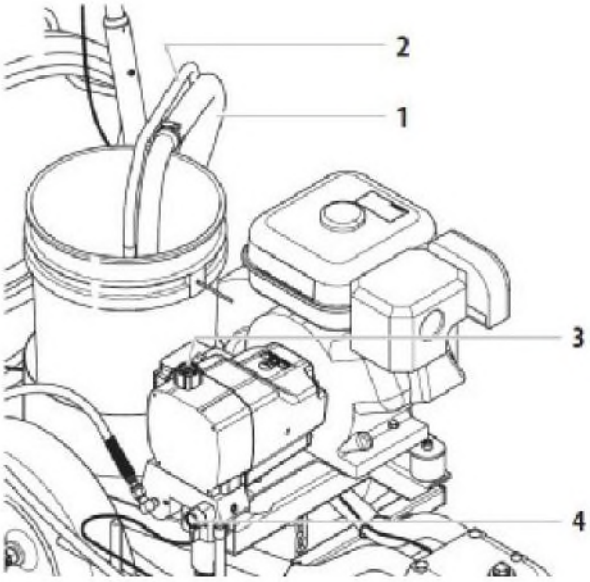

4. Start the petrol engine (see section 4.2).

5. Wait until detergent escapes from the return hose.

1. Close relief valve, valve position SPRAY (syringes).

2. Unlock the spray gun (see spray gun manual).

3. Hold the spray gun in an open waste bin. Pull the gun trigger on the right handlebar.

4. Inject detergent from the appliance into an open, grounded collection container.

4.4 Preparation of the colour

The spray gun must not yet be equipped with a nozzle guard or nozzle.

1. Immerse the suction hose (Fig. 7, item 1) and return hose (2) in a container with a suitable cleaning agent.

2. Turn pressure regulator (3) to minimum pressure.

3. Open relief valve (4), valve position PRIME (circulation).

4. Start the petrol engine (see section 4.2).

5. Close relief valve, valve position SPRAY (syringes).

6. Hold the spray gun in anopen bin. Pull the gun trigger on the right handlebar.

7. Trigger the spray gun several times and inject into a collection container until the coating material escapes from the spray gun without interruption.

Press the spray gun against the edge of a metal container to ground it during flushing. Otherwise, form electrostatic charges that can cause fires.

Fig. 12

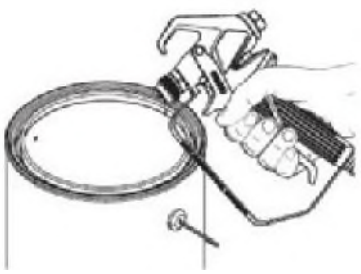

3. Lock the gun by moving the trigger latch to the locking position (see spray gun manual).

4. Attach the nozzle guard and nozzle to the spray gun. Please observe the instructions in the operating instructions for nozzle protection and nozzle.

Risk of liquid injection Do not spray without the nozzle protection. Operate the trigger of the spray gun only when the nozzle guard is either in the spray position or in the position for nozzle cleaning. Always lock the Spritzpistolen-trigger before removing, replacing or cleaning the nozzle.

17. Increase pressure, slowly turn pressure regulator higher. Check the spray pattern, increase the pressure until the atomization is perfect. Always turn the pressure regulator to the lowest position with nogood atomization.

18. The device is ready to splash.

If the pressure is set higher than is required to atomize the paint, premature nozzle wear and overspraying occur.

4.5 Procedure for pressure relief

When the sprayer is taken out of operation, strictlyfollow the steps for pressure relief. This also applies to the adjustment of parts or maintenance work on parts of the spraying system, to the cleaning or replacement of spray nozzles and to the preparation for cleaning.

1. Lock the spray gun. To do this, bring the spray gun trigger into the locked position.

2. Set the pressure to a minimum. To do this, turn the pressure regulator knob all the way to the left,

3. Open relief valve, valve position PRIME

4. Move the throttle lever to the low speed position, and

5. Turn the motor switch to the OFF position.

8. Unlock the spray gun. To do this, bring the lock of the spray gun trigger into the unlocked position (see spray gun manual).

9. Press the metal part of the spray gun firmly onto the side wall of a metal waste container to ground the spray pipesand avoid electrostatic charges.

10. Press the trigger of the spray gun to relieve any pressure still present in the hose.

11. Lock the spray gun. To do this, bring the lock of the spray gun trigger into the lockedposition (see spray gun manual).

4.6 Operating the impeller

The impeller is designed in such a way that the road marker either follows a straight line or allows free movement. If you behind the marker is the Adjustment lever of the wheel on the left Handle.

1. To snap the impeller into place in the "straight line" position, briefly press the adjustmentlever and move the marker forward.
2. Toallow free movement, press and hold the adjustment lever.

4.7 Cleaning a clogged nozzle

If the application is distorted or no material escapes at all when the trigger is pressed, proceed as follows.

1. Open relief valve, valve position PRIME (circulation).
2. If the nozzle is clogged, rotate the nozzle holder by 180° until the arrow on the holder points in the opposite direction to the injection direction and the holder latches into the opposite position (Fig. 13).
3. Close relief valve, valve position SPRAY (syringes).

Fig. 13

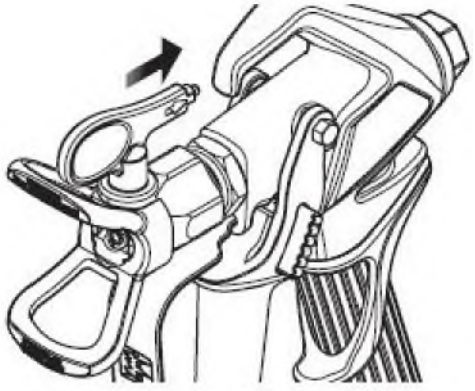

4. Trigger the spray gun once so that the air pressure can blow out the blockage. In the reverse position, NEVER release the spray gun briefly more than ONCE. This procedure can be repeated until the nozzle is no longerclogged.

The discharge from the spray nozzle occurs under high pressure. Contact with a body part can be dangerous. Do not put a finger on the nozzle. Never point the spray gun at a person. Do not operate the spray gunwithout the proper nozzle protectioncover.

4.8 Arbeitsunterbrechung

Follow the steps below if you interrupt work for up to 20 hours.

1. Perform the steps for pressure relief described in the "Operation" section of this manual(section 4.5).

2. If a standard nozzle is to be cleaned, see page 65, point 8.2. If a different nozzle version is fitted, then proceed according tothe corresponding operating instructions.

3. Depending on the version, leave the suction hose and return hose immersed in the coating material or swivel or dip into a corresponding cleaning agent.

4. Cover the coating material with plastic and place the device in a cool, dark place so that the material does not dry out.



When using quick-drying or two-component coating material, the device must be used within the processing time with
suitable cleaning agent
durchspülen.

Remove the plasticcover from the material container if you want to spray again and follow the steps in section 4.4.

4.9 Handling the high-pressure hose

This unit is equipped with a high-pressure hose, which is especially suitable for airless pumps.

Risk of injuries due to leaking high-pressure hose. Replace damaged high-pressure hose immediately. Never defect
High-pressure hose itself
repair!

The high-pressure hose must be handled with care. Avoid sharp bending or bending, smallest bending radius about 20 cm. Do not drive over high-pressure hose, as well as protect from sharp objects andedges. Never pull on the high-pressure hose to move the device.

Make sure that the high-pressure hose does not twist. This can be prevented by using a MONSTER spray gun with swivel joint and a hose reel.

With old high-pressure hoses, the risk of damage increases. MONSTER recommends using the high-pressure hose after 6 years.

For reasons offunction, safety and service life, only use original MONSTER high-pressure hoses.

5 Cleaning



The sprayer, hose and spray gun must be thoroughly cleaned every day. If this does not happen, the
Paint and significantly affect the performance of the device.



Always spray with the lowest possible pressure if the nozzle protection of the spray gun
is degraded and the sprayer, hose or spray gun is cleaned with alcohol or othersolvents. Electrostaticcharges can lead to fires or explosions if flammable fumes are present.

5.1 Special cleaning instructions when usingflammable solvents

- Always rinse the spray gun outdoors and, if possible, one hose length away from the spray pump.

- If the solvents used for flushing are collected in a metal container of about 4 litres capacity,place them in a container with a capacity of about 20 l and only then rinse further.

- No flammable vapours must
accumulate in the work area.

- Observe all cleaning instructions.

5.2 Cleaning the sprayer

1. The instructions set outin the section Operational steps for
Perform "Pressure relief" (clause 4.5).

2. Remove the nozzle and nozzle guard and clean with a brush and a suitable solvent.

3. Hang the syphon tube in a container with the appropriate solvent.



Use only compatible solvents when removing oil-based paints, varnishes, coal tar and epoxy resins. Ask the manufacturer to recommend a suitable solvent.

4. Hang the drain hose in a metalwaste container.

5. Set the pressure to a minimum. To do this, turn the pressure regulator knob all the way to the left.

6. Open relief valve (4), valve position PRIME (traffic).

7. Start the petrol engine (see section 4.2).

8. Circulate the solvent through the sprayer and empty the paint through the drain hose into a metal waste container and rinse.

9. Close relief valve, valve position SPRAY (syringes).



Press the spray gun against the edge of a metal container to ground it during flushing. Otherwise, electrostatic charges can form, whichcan cause fires.

10. Hold the triggered spray gun in the metal waste container and operate until the paint is flushed out of the hose and only solvent escapes from the spray gun.

11. Continue to hold the triggered spray gun in the waste container until only clean solvent escapes from the spray gun.



For longer storage or for storage in cold weather, fill the entire system with alcohol.

12. Before changing from solvent to color , follow the steps described in this instruction manual to "Procedure for pressure relief".

13. Store the sprayer in a dry, clean place.



Do not store the sprayer under pressure.

5.3 Cleaning equipment from the outside

Achtung

Never hose down with a high-pressure or high-pressure steam cleaner. Do not insert high-pressure hose into solvents. Wipe the outside only with a soaked cloth.

Wipe the outside of the device with a cloth soaked in suitable detergent.

5.4 Ansaugfilter

A clean intake filter always ensures maximum flow rate, constant spray pressure and proper functioning of the device.

1. Unscrew the filter (Fig. 14) from the intake pipe.
2. Clean or replace filters. Clean with a hard brush and appropriate detergent.

Fig. 14

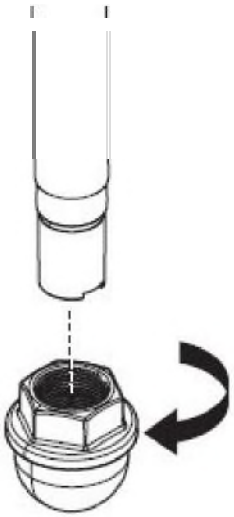

5.5 Cleaning high-pressure filters

Clean the filter cartridge regularly. A dirty or clogged high-pressure filter will cause a poor spray pattern or a clogged nozzle.

1. Perform the steps for pressure relief described in the "Operation" section of this instruction manual (section 4.5).
2. Unscrew the filter housing (Fig. 15, item 1) with a wrench.
3. Remove the filter cartridge (2) from the support spring (3).
4. Clean all parts with appropriate detergent. If necessary, replace the filter cartridge.
5. Check O-ring (4), replace if necessary.
6. Attach the support disc (5) to the support spring (3). Slide the filter cartridge (2) over the support spring.
7. Screw in the filter housing (1) and tighten it to the stop with a wrench.

Fig.15

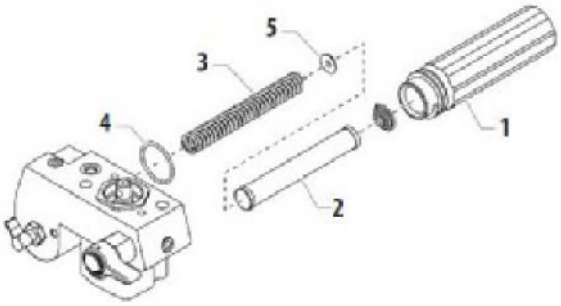

5.6 Cleaning the airless spray gun

Clean the spray gun after each Use.

1. Rinse the airless spray gun at low operating pressure with a suitable cleaning agent.

2. Clean the nozzle thoroughly with a suitable cleaning agent so that no coating residues remain.

3. Thoroughly clean the airless spray gun on the outside.

Plug-in filter in the airless spray gun (Fig. 16)

1. Detach the top side of the trigger guard (1) from the gun head.

2. Use the underside of the trigger guard as a wrench, loosen thehandle (2) with this and remove it from the gun head.

3. The old filter (3) from the
Pull the spray gun head. Clean or replace it.

4. First insert the new filter with the conical end into the spray gun head.

5. Slide the handle into the spray gun head until it is firmly seated. Tighten it with the trigger wrench.

6. Allow the trigger guard to snap back into the gun head.

Fig. 16

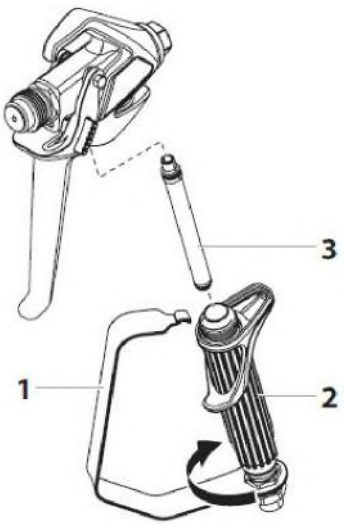

6 Maintenance

6.1 General maintenance

For safety reasons, an annual inspection by professionals is highly recommended. Please also observe all applicable national regulations. In Germany, this verification (including proof) is mandatory by the employers' liability insurance association.

Minimum tests before each commissioning

Check the connections of the high-pressure hose and spray gun.

Inspections at regular intervals

1. Check the inlet and outlet valve for wear, clean and replace wear parts.

2. Clean filter inserts (spray gun, suction system and pump filter), replace them if necessary.

6.2 Hochdruckschlauch

Visually check the high-pressure hose for any incisions or dents, especially at the transition to the fitting. It must be possible to rotate union nuts freely. The conductivity of less than 1 mega ohm must be present over the entire length.

Achtung

Have all electrical tests carried out by the MONSTER service.

With old high-pressure hoses, the risk of damage increases. MONSTER recommends replacing the high-pressure hose after 6 years at the latest.

6.3 Easy maintenance of the engine (petrol engine)

- For detailed maintenance and technical specifications, please refer to the separate manual for gasoline engines. - All maintenance on the engine should be carried out by a dealer authorised by the engine manufacturer.
- Usehigh-value engine oil. For general use in all temperatures, 10W30 is recommended. Other climate conditions may require different viscosities. - Use only one (NGK) BR-6HS spark plug. The distance in the spark plug should be 0.028 to 0.031 in. (0.7 to 0.8 mm). Always use a spark plug wrench.

Daily

1. Check engine oil level and top up if necessary.
2. Check the fuel level and top up if necessary.



To recharge always the
Perform the steps
previously explained in this guide.

First 20 hours

- Change engine oil.

Every 100 hours

- Change engine oil.
- Clean sediment cups.
- Clean the spark plug and keep the distance restore.
- Clean spark arresters .

Weekly

- The air filter cover remove And that Clean element. In a very dusty environment the filter must be checked daily. That Element Replace if necessary. Replacement elements can be obtained from the local dealer for this Engine manufacturers.

Operation and maintenance of the engine

- Clean and oil the air filter mat of the petrol enginefor 25 hours or once a week. The air intake screen around the flywheel in the gasoline engine should not be filled with paint or waste. Clean it regularly. The service life and performance of the petrol engine model depends on the correct operation of the petrol engine. Change the oil every 100 hours. Non-compliance with this can lead to overheating of the engine. Refer to the manufacturer's instruction manual supplied.
- In order to save gasoline, extend the service life and preserve the performance of the sprayer, the gasoline engine should always run at the lowest possible speed, at which it runs evenly and without effort, emitting the desired amount of paintrequired for the respective painting work. Higher speeds do not produce higher working pressure.
- The warranty for the gasoline engines is limited to the original manufacturer.

6.4 Setting the trigger voltage

Proceed as follows to adjust the spring tension of the trigger lever on the gun holder . The release lever actuates the trigger lever of the spray gun. The voltage ensures that the gun sprays when the gun trigger is released. To ensure sufficient voltage, a distance of approx. 0.8 to 1.6 mm between the release lever and the trigger lever of the spray gun.

Achtung

During system settings , the trigger lock of the Spray gun always be locked.

1. Loosen the bolt of the cable guide (1) with a wrench.
2. Slide the cable routing into the appropriate direction to create a distance of 0,8 to 1,6 mm between the release lever (2) and the trigger lever of the spray gun (3).

a. Slide the cable guide towards the spray gun to increase the distance between the trigger lever and the trigger lever of the spray gun.

b. Slide the cable guide away from the spray gun to reduce the distance between the trigger lever and the trigger lever of the spray gun.

Fig. 17

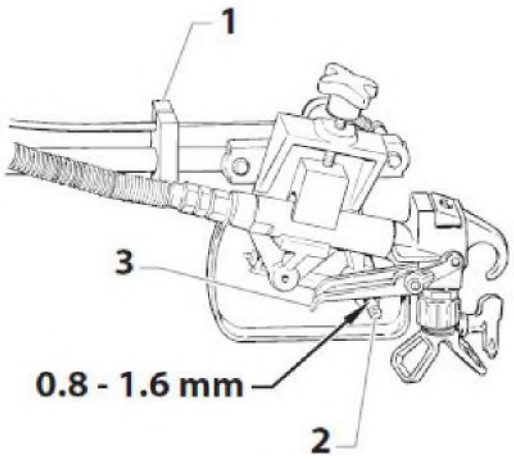

3. Tighten the locking screw.

6.5 Help in case of malfunctions

Type of disorder	Possible cause	Measure to remedy the fault
A. The device is not running.	1. The pressure level is set too low. 2. Cable damaged or loose. 3. The fuel tank is empty.	1. Turn the pressure regulator knob to the right to increase pressure. 2. Check the device or bring it to an authorized service provider. 3. Fill the fuel tank.
B. The device does not suck	1. PRIME/SPRAY valve is connected to the SPRAY Position 2. Air leak in the Ansaugrohr/Ansaugsystem 3. The pump filter screen and/or the inlet filter screen is clogged. 4. Intake pipe/intake system is clogged	1. Rotate the PRIME/SPRAY valve to the right to the PRIME position. 2. Check the suction pipe/suction system connection and tighten or replace it if damaged. 3. Remove and clean the pump filter unit. Remove and clean the inlet filter screen. 4. Remove and clean the intake pipe/suction system
C. No pressure is built up or maintained in the device.	1. The spray nozzle is worn. 2. The spray nozzle is too big. 3. Pressure is not set correctly. 4. Pump, spray gun or inlet filter screen is clogged. 5. When adjusting the Prime/Spray valve to the spray position, spray material flows out of the return hose. 6. Air leak in the Ansaugrohr/Ansaugsystem 7. There is an external fluid leak. 8. There is an internal leak in the fluid system (seals are sealedand/or dirty, valve balls are worn). 9. The valve seats are worn. 1. The top seals are worn. 2. The piston rod is worn.	1. Replace the spray nozzle according to spray gun instructions. 2. Replace the spray nozzle with a nozzle with a smaller opening according to the spray gun instructions. 3. Turn the pressure regulator knob clockwise to increase the pressure 4. Remove and clean the pump filter unit. Remove and clean spray gun filters. Remove and clean the inlet filter screen. 5. Replace or clean the PRIME/SPRAY valve. 6. Check the suction pipe/suction system connection and tighten or replace it if damaged. 7. Check all connections for leaks. Tighten connections if necessary. 8. Clean valves and fluid system according to fluid system care instructions in the Cover maintenance chapters of this guide. 9. Reverse or replace the valve seat according to the instructions in theMaintenance chapter of this manual.
D. There is a liquid leak in the upper part of the pump	1. The wrong airless spray hose was used. 2. The spray nozzle is worn or too large. 3. Excessive pressure.	1. Replace the seals of the pump according to the "Color Level Maintenance" procedure in the maintenance section of this manual. 2. Replace the piston rod according to the "Color Level Maintenance" procedure in the maintenancesection of this manual.
E. Excessive vibrations on the spray gun	1. The spray nozzle is too large for the spray material used. 2. Incorrect pressure level setting. 3. Poor material flow 4. The spray material used is too viscous.	1. Replace the hose with textile-braided and grounded airless hose with a length of at least 15 m and a diameter of 6.35 mm. For reasons of function, safety and service life, only MONSTER original high-pressure hoses are used. 2. Replace the spray nozzle according to spray gun instructions. 3. Turn the pressure regulator knob to the left to reduce the spray pressure level.
F. Poor spray pattern.	1. The pressure level setting is too low.	1. Replace spray nozzle with new or smaller nozzle according to spray gun instructions. 2. Adjust pressure with pressure regulator knob until the spray pattern is optimized. 3. Clean all filter sieves and units . 4. Dilute spray material according to manufacturer's recommendations.
G. The device does not have the required power		1. Rotate the pressure regulator knob clockwise to increase the pressure

Guarantee

PaintMaster SARL ("PaintMaster") warrants that at the time of delivery to the buyer ("End User"), the equipment covered by this warranty will be free from defects in materials and workmanship. Except for specific, limited or extended warranty announced byPaintMaster, PaintMaster's warranty obligation is limited to the free replacement or repair of those parts which, after proven to PaintMaster to be verifiable, prove to be defective within twelve (12) months of sale to the end user. The warranty applies only if the device has been installed and operated in accordance with PaintMaster's recommendations and instructions. This warranty does not cover damage or wear caused by abrasion, corrosion or improper use, carelessness, accident, improper installation, use of non-PaintMaster spare parts, or modifications to the equipment that affect normal use. Defective parts must be returned to the authorized PaintMaster dealer/office. All transport costs, including return to the factory, if necessary,are to be borne by the end user and must be paid in advance. Repaired or replaced accessories will be returned at the expense of the end user after advance payment of transport costs
THERE IS NO OTHER WARRANTY FOR DEFECTS. PAINTMASTER SHEREBY DISCLAIMS ANY AND ALL IMPLIED WARRANTIES, INCLUDING, BUT NOT LIMITED TO, MERCHANTABILITY AND FITNESS FOR A PARTICULAR PURPOSE, TO THE FULLEST EXTENT PERMITTED BY LAW. THE DURATION OF ALL IMPLIED WARRANTIES WHICHCANNOT BE EXCLUDED ARE LIMITED TO THE DURATION SPECIFIED IN THE EXPRESS WARRANTY. PAINTMASTER SHALL NOT BE LIABLE IN ANY WAY BEYOND THE PURCHASE PRICE. LIABILITY FOR CONSEQUENTIAL, INCIDENTAL OR SPECIAL DAMAGES UNDER ANY AND ALL WARRANTIESIS EXCLUDED TO THE FULLEST EXTENT PERMITTED BY LAW. PAINTMASTER MAKES NO WARRANTIES AND DISCLAIMS ALL IMPLIED WARRANTIES OF MERCHANTABILITY AND FITNESS FOR A PARTICULAR PURPOSE WITH RESPECT TO ACCESSORIES, EQUIPMENT, MATERIALS AND COMPONENTS SOLD BUT NOT MANUFACTURED BY PAINTMASTER. THOSE COMPONENTS SOLD BY PAINTMASTER BUT NOT MANUFACTURED BY PAINTMASTER (SUCH AS GAS ENGINES, SWITCHES, HOSES, ETC.) SUBJECT TO THE WARRANTY OF THE RESPECTIVE
MANUFACTURERS, IF GRANTED. PAINTMASTER SHALL ASSIST BUYER IN AN APPROPRIATE MANNER WHEN IT COMES TO CLAIMS FOR BREACH OF WARRANTY.

Entsorgungshinweis



According to the European Directive 2002/96/EC on the disposal of old electricalappliances, and its implementation in national law, this product is not to be disposed of with household waste, but must be recycled in an environmentally friendly manner!

Your monster old device will be taken back by us or our sales agencies and disposed of for you in an environmentally friendly manner. In this case, please contact one of our service centers or contact us directly.